LCN CLOSERS

Part of worldwide Ingersoll-Rand

ILLUSTRATED PARTS LIST

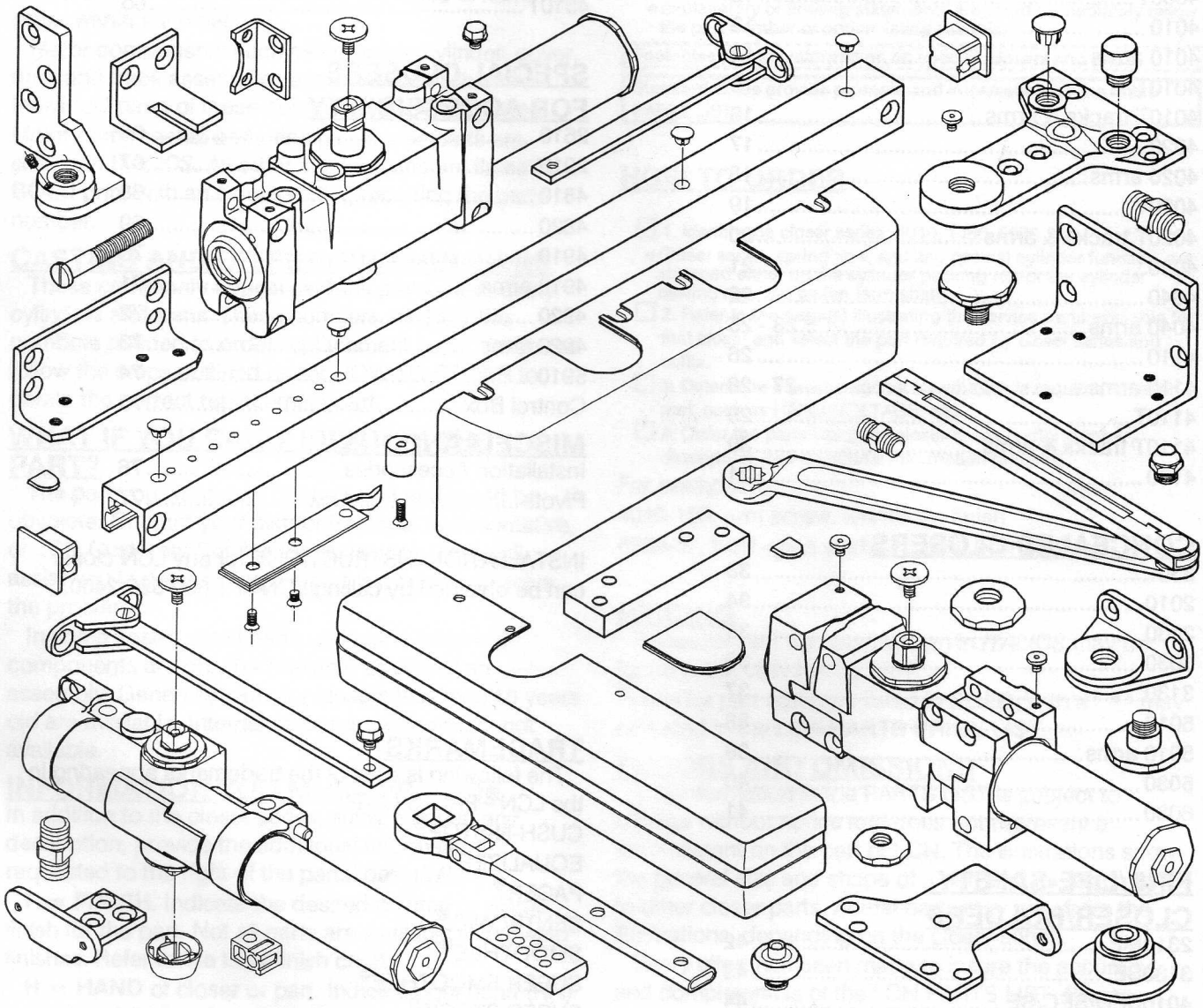

© 1992 Schlage Lock Co.
LCN CLOSERS, 121 W.Railroad Ave.,Princeton, IL 61356
Phone (815) 875-3311 Fax (815) 875-3222

TABLE OF CONTENTS

GENERAL INFORMATION

How to Order....3
Trademarks....3
Suffix Index....77 - 78

SURFACE MOUNTED CLOSERS

1070....4
1070 arms....5
1460....6
1460 arms....7 - 9
1460T....10
1460T tracks & arms....11
4000T....12
4010....13
4010 arms....14
4010T....15
4010T tracks & arms....16
4020....17
4020 arms....18
4020T....19
4020T tracks & arms....20
4030....21
4040....22
4040 arms....23 - 25
4110....26
4110 arms....27 - 28
4110T....29
4110T tracks & arms....30
4130....31

CONCEALED CLOSERS

330....33
2010....34
2030....35
3030....36
3130....37
5010....38
5010 arms....39
5030....40
6030....41

FIRE/LIFE-SAFETY CLOSER/HOLDERS

2310ME....42
3130SE....43
4010SED/SEC/SE....44
4010SED/SEC/SE tracks & arms....45 - 46
4010SEDS/SECS/SES....47
4110SED/SEC/SE....48
4110SED/SEC/SE tracks & arms....49 - 50
4110SEDH/SECH,SEH....51
4310MED....52 - 53
4310ME/MEC....54 - 55
4410MED....56 - 57
4410 ME/MEC....58 - 59

HIGH SECURITY CLOSERS

2210DPS....60
2210....61
4210....62
4210T....63
4510....64
4510T....65

SPECIAL CLOSERS FOR ACCESSIBILITY

2610....66
2910....67
4810....68
4820....69
4910....70
4910 arms....71
4920....72
4920 arms....73
5910....74
Control Box....75

MISCELLANEOUS

Installation Accessories....76
Pivots....77

INSTALLATION INSTRUCTIONS for any LCN closer can be obtained by calling LCN at 1-800-526-2400.

TRADEMARKS

The following is a list of the trademarks appearing in the LCN® PARTS LIST.

CUSH-N-STOP®
EQUALIZER®
PACER®
SENTRONIC®
SMOOTHEE®
SUPER SMOOTHEE®
SUPER STOCK®
THRIFTEE®

© 1992 Schlage Lock Co.

HOW TO USE THE LCN PARTS LIST

The PARTS LIST is designed to help technical service personnel correctly identify parts that may be required to return an LCN closer to service.

PARTS LIST ORGANIZATION

The PARTS LIST illustrates all replacement parts available through LCN distributors. The information has been organized by the type of closer. The sections in order are; Surface Mounted, Concealed, Life-Safety, Security, Special Closers for Accessibility, and Miscellaneous Products. Closers are listed in numerical order within each section.

Major components such as complete cylinder, cover, arm, and track assemblies are listed for each series. Individual parts of these components are also listed. Major components and principal service parts are shown in *ITALICS*. All other service parts are listed in **BOLD** print with an asterisk " * " preceding the part number.

CASTING AND/OR FORGING NUMBERS

These commonly appear on LCN parts, particularly cylinders and arms. These numbers are NOT the numbers needed to order replacement parts. You must follow the steps outlined under HOW TO ORDER to obtain the correct replacement part.

WHAT IF YOU CAN'T IDENTIFY THE PART?

The part you want may not be listed and could be obsolete. Contact your distributor, local representative, or LCN Customer Service for assistance. They will assist you in determining if a part is available to solve the problem.

In some cases, small parts and some electrical components are only be available as part of an assembly. Generally parts for closers less than 10 years old are available. Internal parts for cylinders are not available.

INFORMATION YOU MUST PROVIDE

In addition to the closer series, suffix number, and description, provide the additional information requested to the right of the parts' description.

F = FINISH. Indicate the desired painted or plated finish for the part. Not all parts are available with plated finishes. Refer to the LCN finish chart.

H = HAND of closer or part. Indicate right hand (RH) or left hand (LH) swing of the door.

S = SIZE. Refers to the spring size inside the cylinder assembly. This is based on the width of the door with size six (6) the strongest spring size.

C = CYLINDER FUNCTION. Selected closers offer special cylinder functions such as delayed action or hold-open bypass.

M = MOUNTING. Selected closers require specialized mounting options.

V = VOLTAGE. Some parts require specific input voltage information. In the case of SED -3038 or -3938 tracks and MED -3071 cylinder assemblies two input voltages are required.

☐ Where options other than FINISH and HAND are required, the available choices are listed like this.

- Explanatory or limiting statements are listed immediately below the part number or option listing like this.

Footnotes present information on specific closers and parts.

Standard notes provide prompts and information for the entire PARTS LIST.

HOW TO ORDER

☐ 1. Identify the closer series; 4010, 1460, 2030, etc.

- Closer series, spring size, and any special cylinder function, are stamped either on the cylinder packing nut or the cylinder casting near the pinion (arm shaft).

☐ 2. Refer to the page(s) illustrating the service parts available for that closer and select the part required by closer series and suffix.

☐ 3. Determine if any additional information is required for each part, such as HAND, VOLTAGE, etc.

☐ 4. Order the parts using the closer series, suffix number, description, and additional information required.

For example:

4010-159, arm screw, aluminum finish

4920-37, hold-open stud, LH, dark bronze finish

PRICING

Prices for part numbers shown in *ITALICS* may be found in the LCN PRICE LIST.

Prices for part numbers listed in **BOLD**, with a " * " may be found in the **LCN PARTS PRICE LIST**.

ERRORS AND OMISSIONS

The information in the PARTS LIST is subject to change without notice and does not represent a commitment on the part of LCN. The illustrations show the general size and shape of a part and its relationship to other closer parts. Actual parts may vary from the illustrations, depending on the closer series.

Every effort has been made to insure the accuracy and completeness of the LCN PARTS LIST. Please contact the LCN Customer Service Department if you identify an error or an omission. We will incorporate all corrections and changes at the next printing.

© 1992 Schlage Lock Co.
LCN CLOSERS, 121 W.Railroad Ave.,Princeton, IL 61356
Phone (815) 875-3311 Fax (815) 875-3222

1070 SERIES

THRIFTEE®
SURFACE MOUNTED CLOSER

Specify finish (F) and size (S) where indicated.

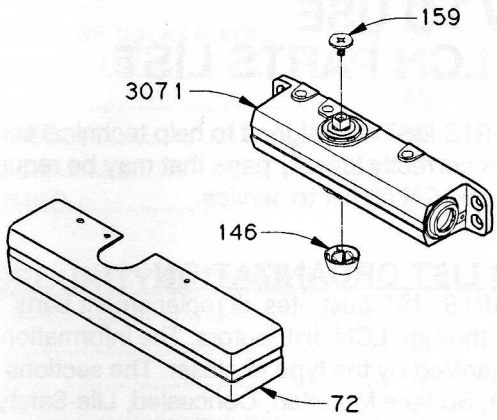

CYLINDER

1070-3071 Cylinder Assembly ..... F,S
☐ SIZE: 1, 2, 3, 4, 5.

COVER

1070-72 Standard Cover ..... F

COMPLETE ARM

1070-3077PA Regular Arm with PA ..... F
- 180° maximum swing. Includes 1070-159, -201, and -62PA.

1070-3077 Regular Arm..... F
- 180° maximum swing. Includes 1070-159.

1070-3049PA Hold-Open Arm with PA..... F
- 180° maximum swing.Includes 1070-159, -201, and -62PA.

1070-3049 Hold-Open Arm ..... F
- 180° maximum swing. Includes 1070-159.

1070-3049FLPA Fusible Link Arm with PA ..... F
- 180° maximum swing.Includes 1070-159, -201, and -62PA.

1070-3049FL Fusible Link Arm..... F
- 180° maximum swing. Includes 1070-159.

INDIVIDUAL PARTS

***1070-146** Shaft Cover..... F
***1070-159** Arm Screw..... F

Prices for part numbers shown in ITALICS may be found in the LCN PRICE LIST. Prices for part numbers shown in **BOLD**, with a " * " may be found in the **LCN PARTS PRICE LIST.**

LCN CLOSERS, 121 W.Railroad Ave.,Princeton, IL 61356
Phone (815) 875-3311 Fax (815) 875-3222
Form #716-0292-10M
© 1992 Schlage Lock Co.

1070 SERIES

THRIFTEE®
SURFACE MOUNTED CLOSER

Specify finish (F) where indicated.

INDIVIDUAL ARM PARTS

Parts for *1070-3077PA* Regular Arm with PA
Parts for *1070-3077* Regular Arm

*** 1070-62PA** **PA Shoe** ..... **F**
- For -3077PA only.

*** 1070-77** **Main Arm & Forearm** ..... **F**
1070-79 Rod & Shoe (w/–83) ..... F
- Length 8 3/8" (212mm).

1070-79LR Long Rod & Shoe (w/–83) .... F
- Length 12 3/8" (314mm). Substitute for -79 for reveals 3 3/4" (95mm) to 5" (127mm).

*** 1070-83** **Arm Set Screw** ..... **F**
1070-201 5th Screw Spacer

Parts for *1070-3049PA* Hold-Open Arm with PA
Parts for *1070-3049* Hold-Open Arm

*** 1070-37** **Hold-Open Stud** ..... **F**
*** 1070-41** **Hold-Open Nut** ..... **F**
*** 1070-49** **H Main Arm & Rod (w/–83)**. **F**
*** 1070-62PA** **PA Shoe** ..... **F**
- For -3049PA only.

*** 1070-78H** **H Head & Tube** ..... **F**
*** 1070-83** **Arm Set Screw** ..... **F**
1070-201 5th Screw Spacer
*** 1070-3045** **Hold-Open Shoe** ..... **F**

Parts for *1070-3049FLPA* Fusible Link Arm with PA
Parts for *1070-3049FL* Fusible Link Arm

*** 1070-28** **Fusible Link**
- Release Temperature 165°F standard; 125°F or 135°F optional.

*** 1070-49** **H Main Arm & Rod (w/–83)**. **F**
*** 1070-62PA** **PA Shoe** ..... **F**
- For -3049FLPA only.

*** 1070-83** **Arm Set Screw** ..... **F**
*** 1070-136** **FL Forearm (w/–28)** ..... **F**
1070-201 5th Screw Spacer

Prices for part numbers shown in ITALICS may be found in the LCN PRICE LIST. Prices for part numbers shown in **BOLD**, with a " * " may be found in the **LCN PARTS PRICE LIST.**

REGULAR ARM WITH PA 1070-3077PA
REGULAR ARM 1070-3077

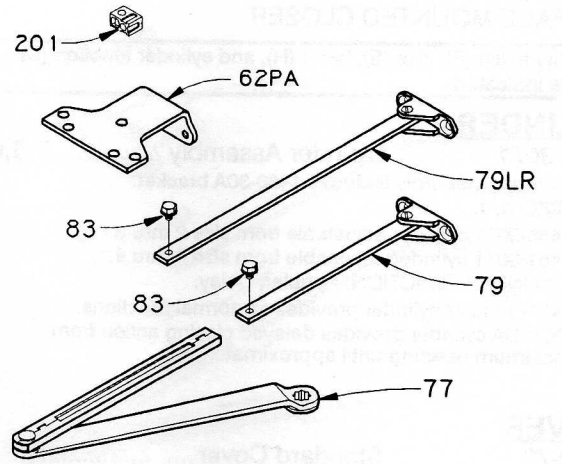

HOLD-OPEN ARM WITH PA 1070-3049PA
HOLD-OPEN ARM 1070-3049

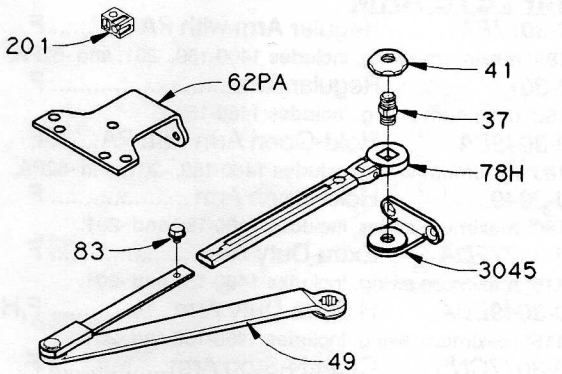

FUSIBLE LINK ARM WITH PA 1070-3049FLPA
FUSIBLE LINK ARM 1070-3049FL

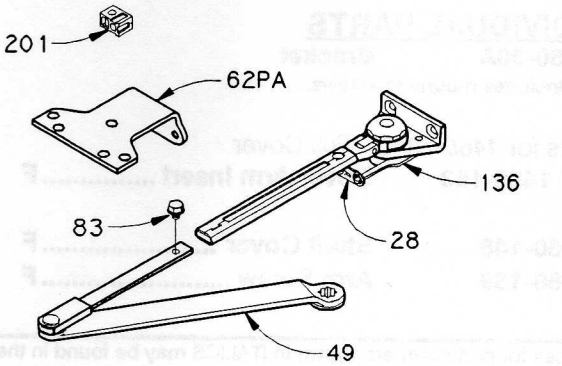

© 1992 Schlage Lock Co.
LCN CLOSERS, 121 W.Railroad Ave.,Princeton, IL 61356
Phone (815) 875-3311 Fax (815) 875-3222

1460 SERIES

SUPER STOCK®
SURFACE MOUNTED CLOSER

Specify finish (F), size (S), hand (H), and cylinder function (C) where indicated.

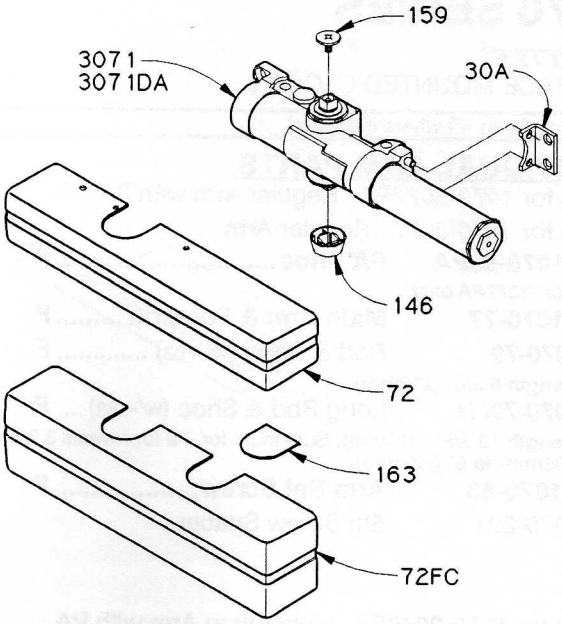

CYLINDER

1460-3071 Cylinder Assembly ..... F,S,C
- Cylinder assembly includes 1460-30A bracket.

☐ SIZE: 0, 1.
- 1460-3071 cylinder adjustable from size 2 thru 6.
- 1461-3071 cylinder adjustable from size 1 thru 4.

☐ CYLINDER FUNCTION: Regular, Delay.
- -3071 regular cylinder provides all normal functions.
- -3071DA cylinder provides delayed closing action from maximum opening until approximately 70°.

COVER

1460-72 Standard Cover ..... F

1460-72FC Full Cover ..... F
- Includes 1460-163.

COMPLETE ARM

1460-3077PA Regular Arm with PA ..... F
- 180° maximum swing. Includes 1460-159, -201, and -62PA.

1460-3077 Regular Arm..... F
- 180° maximum swing. Includes 1460-159.

1460-3049PA Hold-Open Arm with PA..... F
- 180° maximum swing.Includes 1460-159, -201, and -62PA.

1460-3049 Hold-Open Arm ..... F
- 180° maximum swing. Includes 1460-159 and -201.

1460-3077EDA Extra Duty Arm ..... F
- 115° maximum swing. Includes 1460-159 and -201.

1460-3049EDA H Extra Duty Arm ..... F,H
- 115° maximum swing. Includes 1460-159 and -201.

1460-3077CNS Cush-N-Stop Arm..... F
- 110° maximum swing. Includes 1460-159 and -201.

1460-3049CNS H Cush-N-Stop Arm ..... F
- 110° maximum swing. Includes 1460-159 and -201.

INDIVIDUAL PARTS

***1460-30A Bracket**
- Includes mounting screws.

Parts for *1460-72FC* Full Cover

*** 1460-163 Cover Arm Insert ..... F**

***1460-146 Shaft Cover ..... F**

***1460-159 Arm Screw ..... F**

Prices for part numbers shown in ITALICS may be found in the LCN PRICE LIST. Prices for part numbers shown in **BOLD**, with a " * " may be found in the **LCN PARTS PRICE LIST.**

LCN CLOSERS, 121 W.Railroad Ave.,Princeton, IL 61356
Phone (815) 875-3311 Fax (815) 875-3222

Form #716-0292-10M

© 1992 Schlage Lock Co.

1460 SERIES

SUPER STOCK®
SURFACE MOUNTED CLOSER

Specify finish (F) where indicated.

INDIVIDUAL ARM PARTS

Parts for *1460-3077PA* Regular Arm with PA
Parts for *1460-3077* Regular Arm

- *** 1460-62PA** **PA Shoe** ..... **F**
- For -3077PA only.
- *** 1460-77** **Main Arm & Forearm** ..... **F**
- *1460-79* Rod & Shoe (w/–83) ..... F
- Length 8 3/8" (213mm).
- *1460-79LR* Long Rod & Shoe (w/–83) .... F
- Length 12 3/8" (314mm). Substitute for -79 for reveals 3 7/8" (98mm) to 7" (178mm).
- *** 1460-83** **Arm Set Screw** ..... **F**
- *1460-201* 5th Screw Spacer

REGULAR ARM WITH PA 1460-3077PA
REGULAR ARM 1460-3077

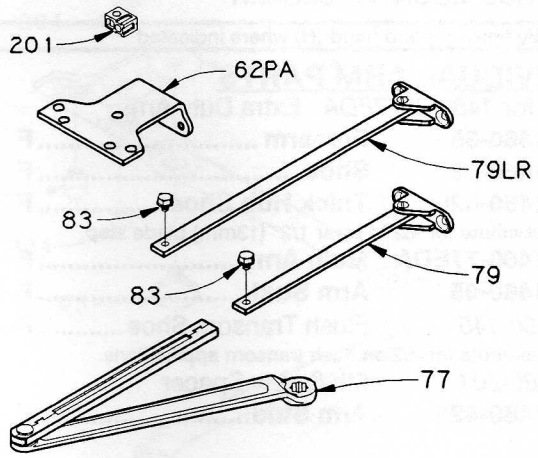

Parts for *1460-3049PA* Hold-Open Arm with PA
Parts for *1460-3049* Hold-Open Arm

- *** 1460-37** **Hold-Open Stud** ..... **F**
- *** 1460-41** **Hold-Open Nut** ..... **F**
- *** 1460-45** **Hold-Open Shoe** ..... **F**
- *** 1460-49** **H Main Arm & Rod** (w/–83H) **F**
- *** 1460-62PA** **PA Shoe** ..... **F**
- For -3049PA only.
- *** 1460-78H** **H Head & Tube** ..... **F**
- Length 5 3/4" (146mm).
- *** 1460-78HL** **H Head & Long Tube** ..... **F**
- Length 8 5/8" (219mm). Substitute for -78H for reveals 1 7/8" (48mm) to 3 7/8" (98mm).
- *** 1460-83H** **H Arm Set Screw** ..... **F**
- *1460-201* 5th Screw Spacer

HOLD-OPEN ARM WITH PA 1460-3049PA
HOLD-OPEN ARM 1460-3049

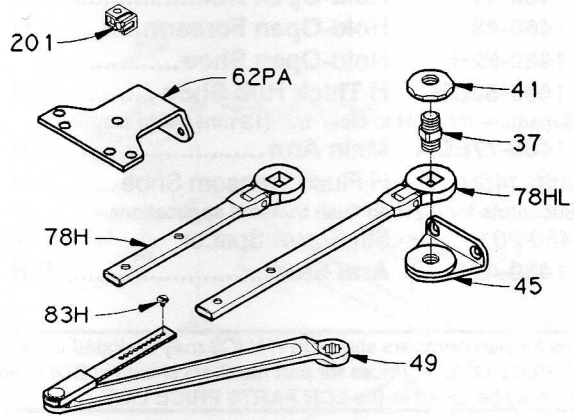

Prices for part numbers shown in ITALICS may be found in the LCN PRICE LIST. Prices for part numbers shown in **BOLD**, with a " * " may be found in the **LCN PARTS PRICE LIST.**

© 1992 Schlage Lock Co.
LCN CLOSERS, 121 W.Railroad Ave.,Princeton, IL 61356
Phone (815) 875-3311 Fax (815) 875-3222

1460 SERIES

SUPER STOCK®
SURFACE MOUNTED CLOSER

Specify finish (F) and hand (H) where indicated.

INDIVIDUAL ARM PARTS

Parts for *1460-3077EDA* Extra Duty Arm

*** 1460-35**	**Forearm**	**F**
*** 1460-62**	**Shoe**	**F**
*** 1460-62G**	**Thick Hub Shoe**	**F**
● Substitute for -62 to clear 1/2" (13mm) blade stop.		
*** 1460-77EDA**	**Main Arm**	**F**
*** 1460-95**	**Arm Stud**	**F**
1460-145	Flush Transom Shoe	F
● Substitute for -62 on flush transom applications.		
1460-201	5th Screw Spacer	
*** 1460-421**	**Arm Stud**	**F**

Parts for *1460-3049EDA* Hold-Open Extra Duty Arm

*** 1460-37**	**Hold-Open Stud**	**F,H**
*** 1460-41**	**Hold-Open Nut**	**F,H**
*** 1460-48**	**Hold-Open Forearm**	**F,H**
*** 1460-62H**	**Hold-Open Shoe**	**F,**
*** 1460-62GH**	**H Thick Hub Shoe**	**F,H**
● Substitute for -62H to clear 1/2" (13mm) blade stop.		
*** 1460-77EDA**	**Main Arm**	**F,H**
1460-145H	H Flush Transom Shoe	F,H
● Substitute for -62H on flush transom applications.		
1460-201	5th Screw Spacer	
*** 1460-421**	**Arm Stud**	**F,H**

Prices for part numbers shown in ITALICS may be found in the LCN PRICE LIST. Prices for part numbers shown in **BOLD**, with a " * " may be found in the **LCN PARTS PRICE LIST.**

EXTRA DUTY ARM 1460-3077EDA

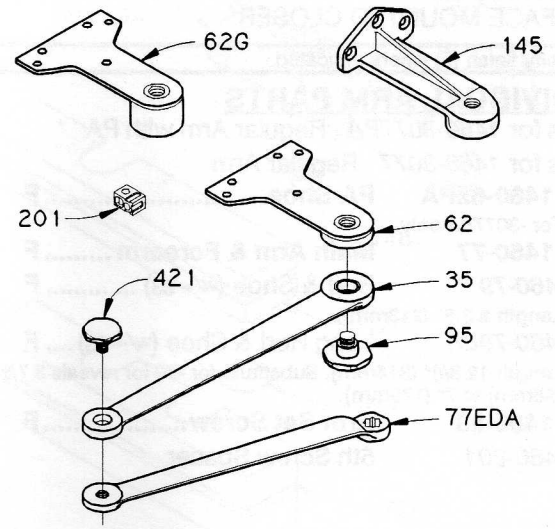

HOLD-OPEN EXTRA DUTY ARM 1460-3049EDA

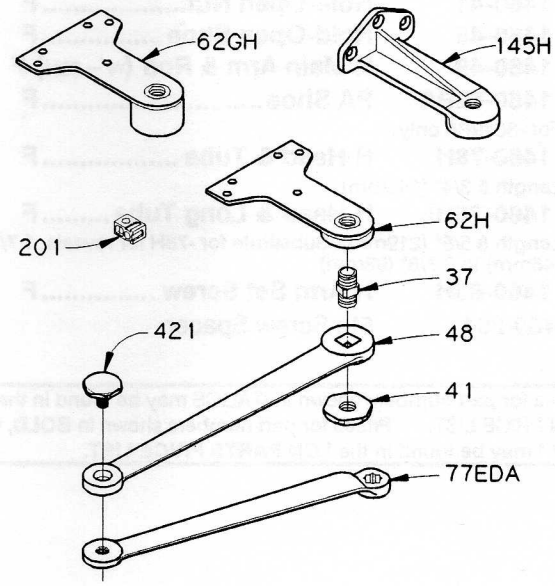

LCN CLOSERS, 121 W.Railroad Ave.,Princeton, IL 61356
Phone (815) 875-3311 Fax (815) 875-3222

Form #716-0292-10M

© 1992 Schlage Lock Co.

1460 SERIES

SUPER STOCK®
SURFACE MOUNTED CLOSER

Specify finish (F) and hand (H) where indicated.

INDIVIDUAL ARM PARTS

Parts for *1460-3077CNS* Cush-N-Stop Arm

* 1460-35	**Forearm**	F
* 1460-62CNS	**Cush Shoe**	F
* 1460-77EDA	**Main Arm**	F
* 1460-95	**Arm Stud**	F
* 1460-124	**Plug**	F
1460-201	5th Screw Spacer	
* 1460-384	**Stop**	F
* 1460-421	**Arm Stud**	F

Parts for *1460-3049CNS* Hold-Open Cush-N-Stop Arm

* 1460-62HCNS	**H-Cush Shoe**	F
* 1460-77EDA	**Main Arm**	F
* 1460-95	**Arm Stud**	F
* 1460-124	**Plug**	F
1460-201	5th Screw Spacer	
* 1460-384	**Stop**	F
* 1460-421	**Arm Stud**	F
* 1460-3048	**H-Cush Forearm**	F

Prices for part numbers shown in ITALICS may be found in the LCN PRICE LIST. Prices for part numbers shown in **BOLD**, with a " * " may be found in the **LCN PARTS PRICE LIST.**

CUSH-N-STOP ARM 1460-3077CNS

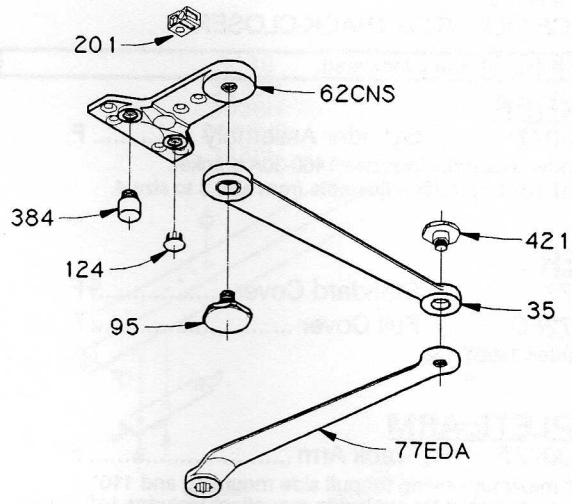

HOLD-OPEN CUSH-N-STOP ARM 1460-3049CNS

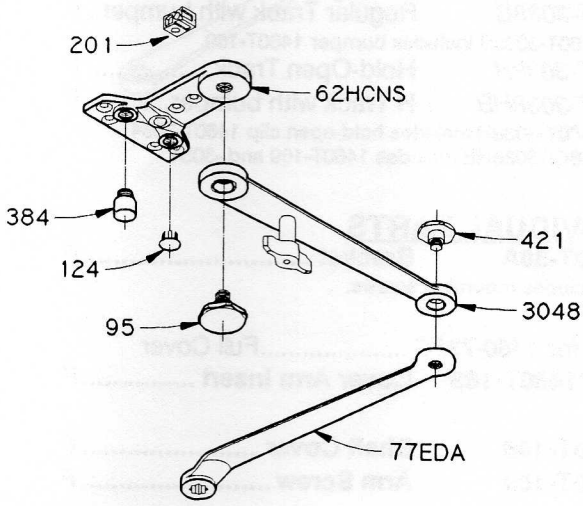

© 1992 Schlage Lock Co.
LCN CLOSERS, 121 W.Railroad Ave.,Princeton, IL 61356
Phone (815) 875-3311 Fax (815) 875-3222

1460T SERIES

SUPER STOCK®
SURFACE MOUNTED TRACK CLOSER

Specify finish (F) where indicated.

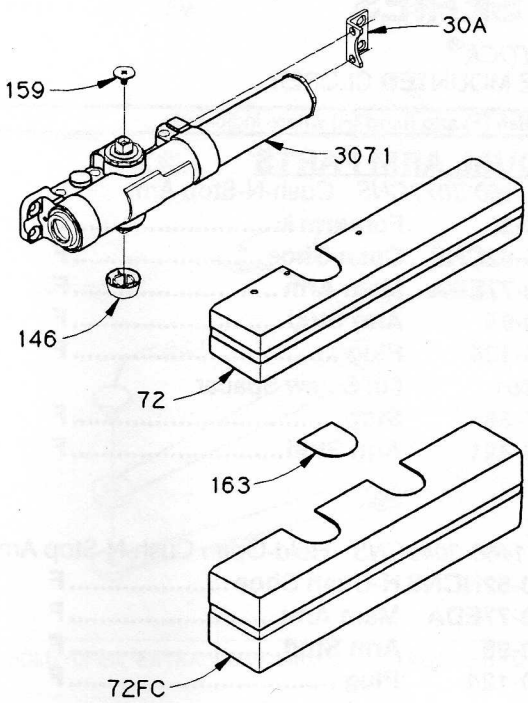

CYLINDER

1460T-3071 Cylinder Assembly ..... F
- Cylinder assembly includes 1460-30A bracket.
- 1460T-3071 cylinder adjustable from size 3 to size 4.

COVER

1460T-72 Standard Cover ..... F
1460T-72FC Full Cover ..... F
- Includes 1460T-163.

COMPLETE ARM

1460T-3077T Track Arm ..... F
- 180° maximum swing for pull side mounting and 110° maximum swing for push side mounting. Includes 1460T-159.

COMPLETE TRACK

1460T-3038 Regular Track ..... F
1460T-3038B Regular Track with bumper.. F
- 1460T-3038B includes bumper 1460T-169.

1460T-3038H Hold-Open Track..... F
1460T-3038HB H Track with bumper..... F
- 1460T-3038H includes hold-open clip 1460T-3054.
- 1460T-3038HB includes 1460T-169 and -3054.

INDIVIDUAL PARTS

***1460T-30A Bracket ..... F**
- Includes mounting screws.

Parts for *1460-72FC* .....Full Cover
*** *1460T-163 Cover Arm Insert ..... F**

***1460T-146 Shaft Cover ..... F**
***1460T-159 Arm Screw ..... F**

Prices for part numbers shown in ITALICS may be found in the LCN PRICE LIST. Prices for part numbers shown in **BOLD**, with a " * " may be found in the **LCN PARTS PRICE LIST.**

LCN CLOSERS, 121 W.Railroad Ave.,Princeton, IL 61356
Phone (815) 875-3311 Fax (815) 875-3222
Form #716-0292-10M
© 1992 Schlage Lock Co.

1460T SERIES

SUPER STOCK®
SURFACE MOUNTED TRACK CLOSER

Specify finish (F) where indicated.

INDIVIDUAL TRACK & ARM PARTS

Parts for *1460T-3038* Regular Track
Parts for *1460T-3038B* Regular Track with Bumper
Parts for *1460T-3038H* Hold-Open Track
Parts for *1460T-3038HB* H Track with bumper

- *** 1460T-73 End Cap (2) ..... F**
- *** 1460T-141 Plug (4) ..... F**
- *** 1460T-141-1 Plug (4) ..... F**
- *1460T-169* Track Bumper Assembly
  - For -3038B and -3038HB. Includes post and mounting screw.
- *1460T-3054* Hold-Open Spring Clip
  - For -3038H and -3038HB. Includes mounting screws.
- *** 1460T-3938H H Track only ..... F**

Parts for *1460T-3077T* Arm

- *** 1460T-78 Arm and Tube ..... F**
- *** 1460T-82 Rod (w/–83H) ..... F**
- *** 1460T-83H Arm Set Screw ..... F**
- *** 1460T-425 Roller Locking Screw ..... F**
- *1460T-3034* Track Roller

Prices for part numbers shown in ITALICS may be found in the LCN PRICE LIST. Prices for part numbers shown in **BOLD**, with a " * " may be found in the **LCN PARTS PRICE LIST.**

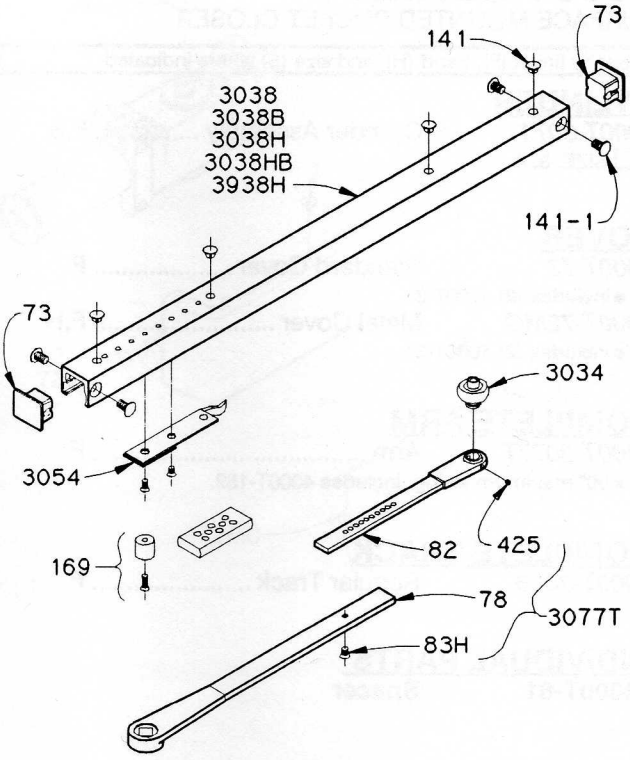

© 1992 Schlage Lock Co.
LCN CLOSERS, 121 W.Railroad Ave.,Princeton, IL 61356
Phone (815) 875-3311 Fax (815) 875-3222

4000T SERIES

SURFACE MOUNTED POCKET CLOSER

Specify finish (F), hand (H), and size (S) where indicated.

CYLINDER

4000T-3071 Cylinder Assembly ..... F,S
☐ SIZE: 3, 4.

COVER

4000T-72 Standard Cover ..... F
- Includes (2) 4000T-31.

4000T-72MC Metal Cover ..... F,H
- Includes (2) 4000T-31.

COMPLETE ARM

4000T-3077T Arm ..... F
- 90° maximum swing. Includes 4000T-159.

COMPLETE TRACK

4000T-3038 Regular Track ..... F

INDIVIDUAL PARTS

***4000T-61 Spacer**

Parts for *4000T-72* Standard Cover
- *** 4000T-31 Cover Screw (2)..... F**
- *** 4000T-163 Arm Insert..... F**
- *** 4000T-164 Screw Insert (2) ..... F**

Parts for *4000T-3038* Regular Track
- *** 4000T-73 End Cap (2) ..... F**
- *** 4000T-141 Plug (4)..... F**
- *** 4000T-3938H H Track only ..... F**

Parts for *4000T-3077T* Arm
- *** 4000T-159 Arm Screw ..... F**
- *** 4000T-425 Roller Locking Screw ..... F**
- *4000T-3034* Track Roller

Prices for part numbers shown in ITALICS may be found in the LCN PRICE LIST. Prices for part numbers shown in **BOLD**, with a " * " may be found in the **LCN PARTS PRICE LIST.**

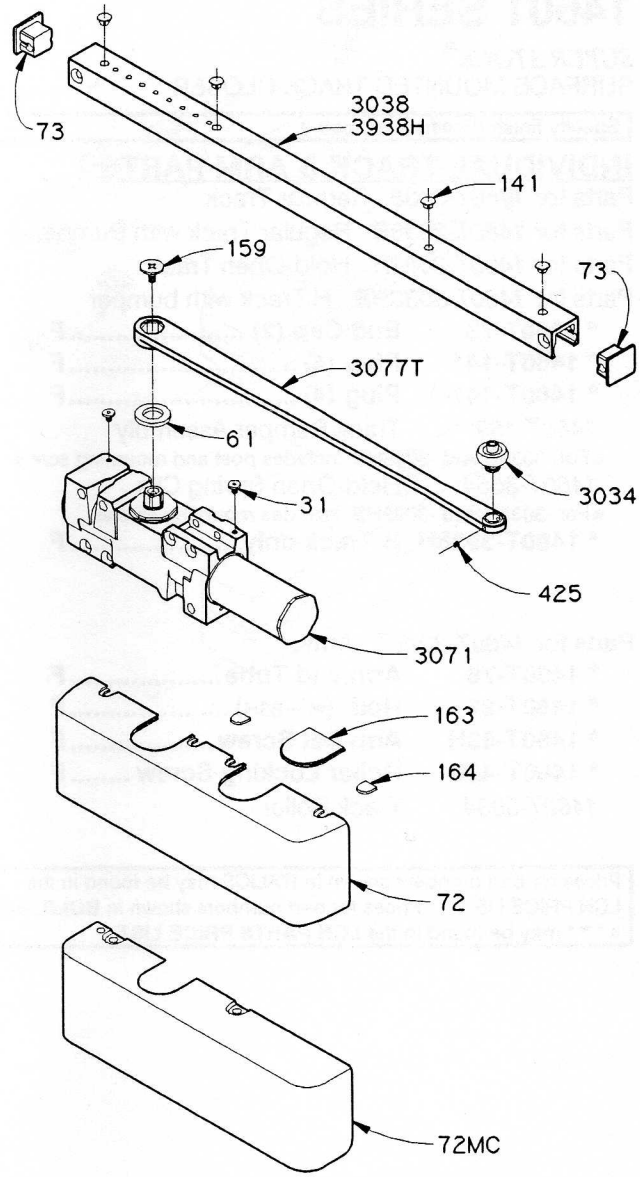

LCN CLOSERS, 121 W.Railroad Ave.,Princeton, IL 61356
Phone (815) 875-3311 Fax (815) 875-3222
Form #716-0292-10M
© 1992 Schlage Lock Co.

4010 SERIES

SMOOTHEE®
SURFACE MOUNTED CLOSER

Specify finish (F), hand (H), size (S), and cylinder function (C) where indicated.

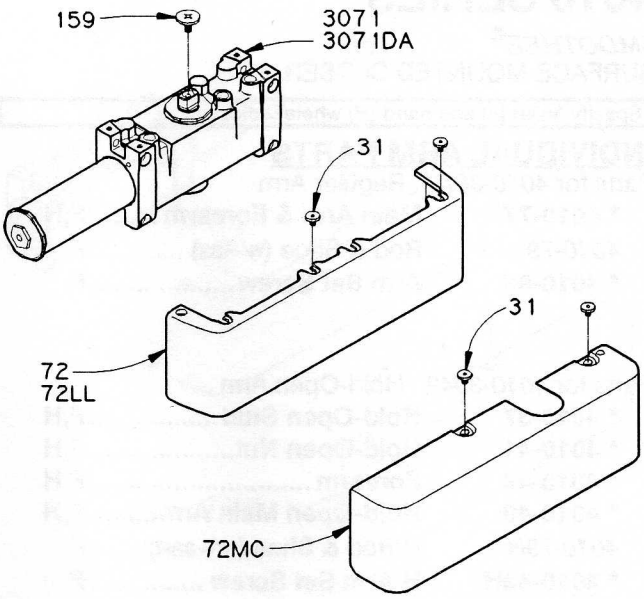

CYLINDER

4010-3071 Cylinder Assembly ..... F,H,S,C

☐ SIZE: 2, 3, 4, 5, 6, N.
- Size 6 not available with 4010-3071DA.
- 4010N-3071 cylinder adjustable from size 1 thru 5.

☐ CYLINDER FUNCTION: Regular, Delay.
- -3071 regular cylinder provides all normal functions.
- -3071DA cylinder provides delayed closing action from maximum opening until approximately 70°.

COVER

4010-72 Standard Cover ..... F
- Includes (2) 4010-31.

4010-72LL Lead Lined Cover ..... F
- Includes (2) 4010-31.

4010-72MC Metal Cover ..... F,H
- Includes (2) 4010-31.

COMPLETE ARM

4010-3077 Regular Arm..... F
- 140° maximum swing. Includes 4010-159.

4010-3049 Hold-Open Arm ..... F,H
- 140° maximum swing. Includes 4010-159.

4010-3049H180 180° Hold-Open Arm ..... F,H
- 180° maximum swing. Includes 4010-159.
- Requires #4010-16 bracket mounting. Closer and arm must be handed opposite of the hand of the door.

4010-3049FL Fusible Link Arm..... F,H
- 140° maximum swing. Includes 4010-159.

INDIVIDUAL PARTS

*** 4010-31 Cover Screw (2)..... F**
*** 4010-159 Arm Screw ..... F**

Parts for old style (pre-1982 production) 4010 Series closer arms are no longer available. These arms can be identified by the use of a horizontal (-32) arm screw instead of the current, vertical (-159) arm screw.

Prices for part numbers shown in ITALICS may be found in the LCN PRICE LIST. Prices for part numbers shown in **BOLD**, with a " * " may be found in the **LCN PARTS PRICE LIST.**

© 1992 Schlage Lock Co.
LCN CLOSERS, 121 W.Railroad Ave.,Princeton, IL 61356
Phone (815) 875-3311 Fax (815) 875-3222

4010 SERIES

SMOOTHEE®
SURFACE MOUNTED CLOSER

Specify finish (F) and hand (H) where indicated.

INDIVIDUAL ARM PARTS

Parts for *4010-3077* Regular Arm

*** 4010-77**	**Main Arm & Forearm**	**F,H**
4010-79	Rod & Shoe (w/–83)	F
*** 4010-83**	**Arm Set Screw**	**F**

Parts for *4010-3049* Hold-Open Arm

*** 4010-37**	**Hold-Open Stud**	**F,H**
*** 4010-41**	**Hold-Open Nut**	**F,H**
*** 4010-48**	**Forearm**	**F,H**
*** 4010-49**	**Hold-Open Main Arm**	**F,H**
4010-79H	H Rod & Shoe (w/–83H)	F
*** 4010-83H**	**H Arm Set Screw**	**F**

Parts for *4010-3049H180* 180° Hold-Open Arm

*** 4010-36**	**180° H Forearm**	**F,H**
*** 4010-37**	**Hold-Open Stud**	**F,H**
*** 4010-41**	**Hold-Open Nut**	**F,H**
*** 4010-45**	**Hold-Open Shoe**	**F,H**
*** 4010-49H**	**H Main Arm**	**F**
*** 4010-95**	**Arm Stud**	**F**

Parts for *4010-3049FL* Fusible Link Arm

*** 4010-9**	**Fusible Link & Spring Set**	

- Release Temperature 165°F standard: 125°F or 135°F optional.

*** 4010-37FL**	**FL Hold-Open Stud**	**F,H**
*** 4010-41**	**Hold-Open Nut**	**F,H**
*** 4010-49**	**Hold-Open Main Arm**	**F,H**
4010-79H	H Rod & Shoe (w/–83H)	F
*** 4010-83H**	**H Arm Set Screw**	**F**
*** 4010-136**	**FL Forearm (w/–9)**	**F,H**

Parts for old style (pre-1982 production) 4010 Series closer arms are no longer available. These arms can be identified by the use of a horizontal (-32) arm screw instead of the current, vertical (-159) arm screw.

Prices for part numbers shown in ITALICS may be found in the LCN PRICE LIST. Prices for part numbers shown in **BOLD**, with a " * " may be found in the **LCN PARTS PRICE LIST.**

REGULAR ARM 4010-3077

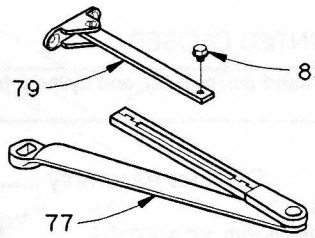

HOLD-OPEN ARM 4010-3049

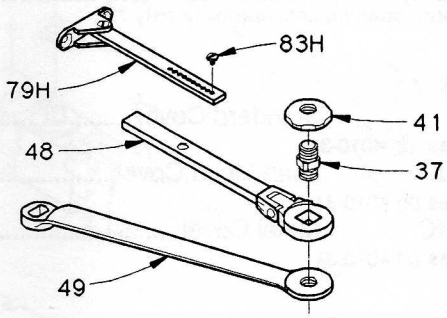

180° HOLD-OPEN ARM 4010-3049H180

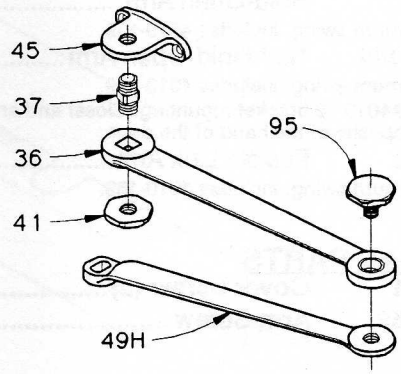

FUSIBLE LINK ARM 4010-3049FL

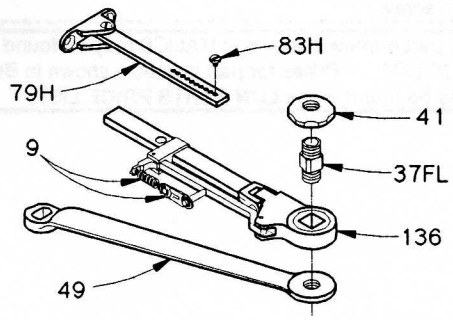

LCN CLOSERS, 121 W.Railroad Ave.,Princeton, IL 61356
Phone (815) 875-3311 Fax (815) 875-3222
Form #716-0292-10M
© 1992 Schlage Lock Co.

4010T SERIES

SMOOTHEE®
SURFACE MOUNTED TRACK CLOSER

Specify finish (F), hand (H), and size (S) where indicated.

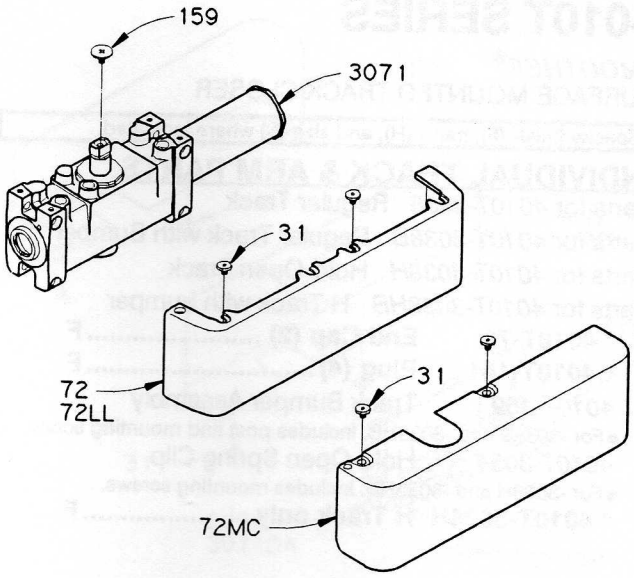

CYLINDER

4010T-3071 Cylinder Assembly ..... F,H,S
☐ SIZE: 3, 4.

COVER

4010T-72 Cover ..... F
- Includes (2) 4010T-31.

4010T-72LL Lead Lined Cover ..... F
- Includes (2) 4010T-31.

4010T-72MC Metal Cover ..... F,H
- Includes (2) 4010T-31.

COMPLETE ARM

4010T-3077T Arm ..... F,H
- 180° maximum swing. Includes 4010T-159 and -425.

4010T-3077DE Double Egress Arm ..... F,H
- 100° maximum swing. Includes 4010T-159 and -425.

COMPLETE TRACK

4010T-3038 Regular Track ..... F

4010T-3038B Regular Track with bumper.. F
- 4010T-3038B includes bumper 4010T-169.

4010T-3038H Hold-Open Track..... F

4010T-3038HB H Track with bumper..... F
- 4010T-3038H includes hold-open clip 4010T-3054.
- 4010T-3038HB includes 4010T-169 and -3054.

INDIVIDUAL PARTS

***4010T-31 Cover Screw (2) ..... F**

***4010T-159 Arm Screw ..... F**

Prices for part numbers shown in ITALICS may be found in the LCN PRICE LIST. Prices for part numbers shown in **BOLD**, with a " * " may be found in the **LCN PARTS PRICE LIST.**

© 1992 Schlage Lock Co.
LCN CLOSERS, 121 W.Railroad Ave.,Princeton, IL 61356
Phone (815) 875-3311 Fax (815) 875-3222

4010T SERIES

SMOOTHEE®
SURFACE MOUNTED TRACK CLOSER

Specify finish (F), hand (H), and size (S) where indicated.

INDIVIDUAL TRACK & ARM PARTS

Parts for *4010T-3038* Regular Track
Parts for *4010T-3038B* Regular Track with Bumper
Parts for *4010T-3038H* Hold-Open Track
Parts for *4010T-3038HB* H Track with bumper

- *** 4010T-73 End Cap (2) ..... F**
- *** 4010T-141 Plug (4) ..... F**
- *4010T-169* Track Bumper Assembly
  - For -3038B and -3038HB. Includes post and mounting screw.
- *4010T-3054* Hold-Open Spring Clip
  - For -3038H and -3038HB. Includes mounting screws.
- *** 4010T-3938H H Track only ..... F**

Parts for *4010T-3077T* Arm

- *** 4010T-425 Roller Locking Screw ..... F**
- *4010T-3034* Track Roller

Parts for *4010T-3077DE* Double Egress Arm

- *** 4010T-78DE Main Arm and Tube ..... F,H**
- *** 4010T-82 Rod (w/-83) ..... F**
- *** 4010T-83H Arm Set Screw ..... F**
- *** 4010T-425 Roller Locking Screw ..... F**
- *4010T-3034* Track Roller

Prices for part numbers shown in ITALICS may be found in the LCN PRICE LIST. Prices for part numbers shown in **BOLD**, with a " * " may be found in the **LCN PARTS PRICE LIST.**

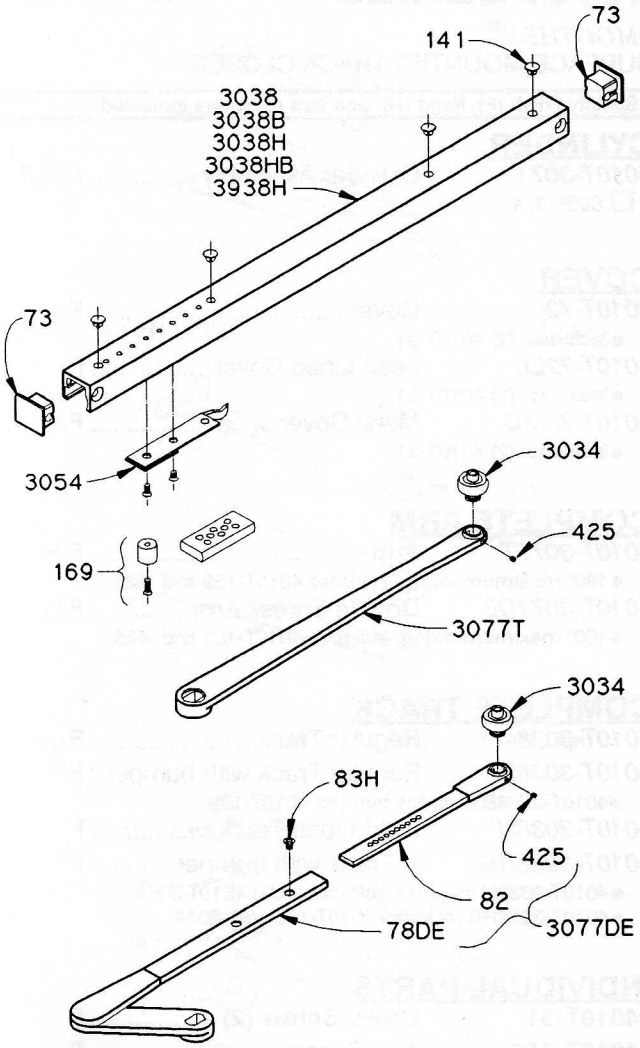

LCN CLOSERS, 121 W.Railroad Ave.,Princeton, IL 61356
Phone (815) 875-3311 Fax (815) 875-3222
Form #716-0292-10M
© 1992 Schlage Lock Co.

4020 SERIES

SMOOTHEE®
SURFACE MOUNTED CLOSER

Specify finish (F), hand (H), size (S), and cylinder function (C) where indicated.

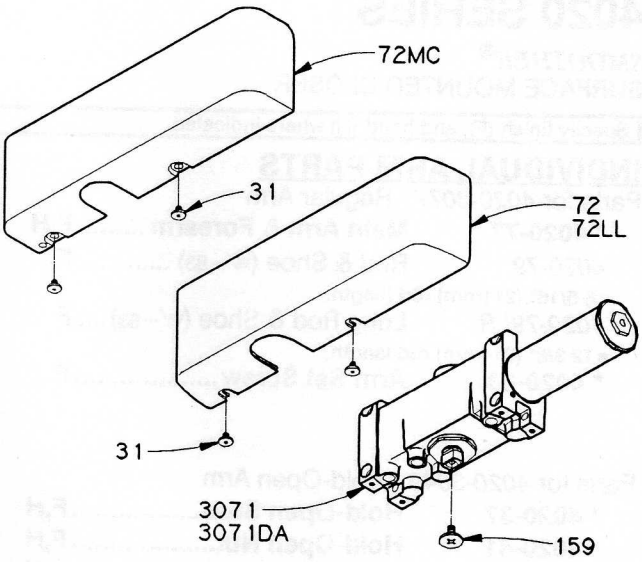

CYLINDER

4020-3071 Cylinder Assembly ..... F,H,S,C

☐ SIZE: 2, 3, 4, 5, 6, N.
- Size 6 not available with 4020-3071DA.
- 4020N-3071 cylinder adjustable from size 1 thru 5.

☐ CYLINDER FUNCTION: Regular, Delay.
- -3071 regular cylinder provides all normal functions.
- -3071DA cylinder provides delayed closing action from maximum opening until approximately 70°.

COVER

4020-72 Standard Cover ..... F
- Includes (2) 4020-31.

4020-72LL Lead Lined Cover ..... F
- Includes (2) 4020-31.

4020-72MC Metal Cover ..... F,H
- Includes (2) 4020-31.

COMPLETE ARM

4020-3077 Regular Arm..... F
- 180° maximum swing for reveals up to 2 9/16" (65mm) and 140° maximum swing for reveals up to 4 13/16" (122mm). Includes 4020-159.
- 140° maximum swing for reveals up to 8" (203mm)

4020-3049 Hold-Open Arm ..... F,H
- 140° maximum swing where the reveal does not exceed 4 13/16" (122mm). Includes 4020-159.

4020-3049FL Fusible Link Arm..... F,H
- 140° maximum swing where the reveal does not exceed 4 13/16" (122mm). Includes 4020-159.

INDIVIDUAL PARTS

*** 4020-31 Cover Screw (2)..... F**
*** 4020-159 Arm Screw ..... F**

Parts for old style (pre-1982 production) 4020 Series closer arms are no longer available. These arms can be identified by the use of a horizontal (-32) arm screw instead of the current, vertical (-159) arm screw.

Prices for part numbers shown in ITALICS may be found in the LCN PRICE LIST. Prices for part numbers shown in **BOLD**, with a " * " may be found in the **LCN PARTS PRICE LIST.**

© 1992 Schlage Lock Co.
LCN CLOSERS, 121 W.Railroad Ave.,Princeton, IL 61356
Phone (815) 875-3311 Fax (815) 875-3222

4020 SERIES

SMOOTHEE®
SURFACE MOUNTED CLOSER

Specify finish (F), and hand (H) where indicated.

INDIVIDUAL ARM PARTS

Parts for *4020-3077* Regular Arm

*** 4020-77**	**Main Arm & Forearm**	**F,H**
4020-79	Rod & Shoe (w/–83)	F
●8 5/16" (211mm) rod length.		
4020-79LR	Long Rod & Shoe (w/–83)	F
●12 3/8" (314mm) rod length.		
*** 4020-83**	**Arm Set Screw**	**F**

Parts for *4020-3049* Hold-Open Arm

*** 4020-37**	**Hold-Open Stud**	**F,H**
*** 4020-41**	**Hold-Open Nut**	**F,H**
*** 4020-48**	**Hold-Open Forearm**	**F,H**
●8 5/8" tube length		
*** 4020-49**	**Hold-Open Main Arm**	**F,H**
4020-79H	H Rod & Shoe (w/–83H)	F
*** 4020-83H**	**H Arm Set Screw**	**F**

Parts for *4020-3049FL* Fusible Link Arm

*** 4020-9**	**Fusible Link & Spring Set**	
●Release Temperature 165°F standard: 125°F or 135°F optional.		
*** 4020-37FL**	**FL Stud**	**F,H**
*** 4020-41**	**Hold-Open Nut**	**F,H**
*** 4020-49**	**Hold-Open Main Arm**	**F,H**
4020-79FL	FL Rod & Shoe (w/–83H)	F
*** 4020-83H**	**H Arm Set Screw**	**F**
*** 4020-136**	**FL Forearm (w/–9)**	**F,H**

Parts for old style (pre-1982 production) 4020 Series closer arms are no longer available. These arms can be identified by the use of a horizontal (-32) arm screw instead of the current, vertical (-159) arm screw.

Prices for part numbers shown in ITALICS may be found in the LCN PRICE LIST. Prices for part numbers shown in **BOLD**, with a " * " may be found in the **LCN PARTS PRICE LIST.**

REGULAR ARM 4020-3077

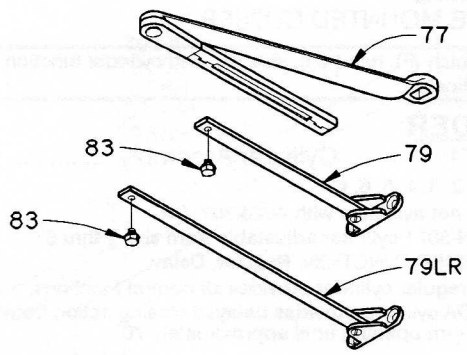

HOLD-OPEN ARM 4020-3049

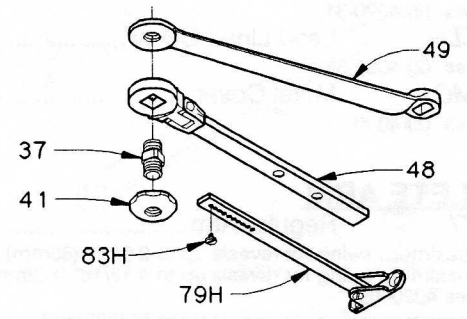

FUSIBLE LINK ARM 4020-3049FL

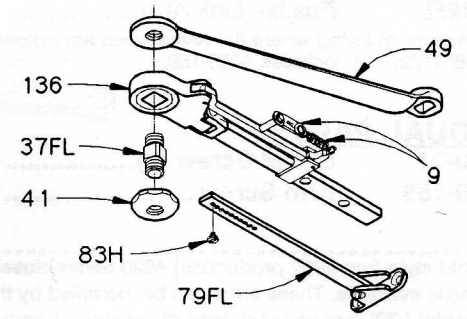

LCN CLOSERS, 121 W.Railroad Ave.,Princeton, IL 61356
Phone (815) 875-3311 Fax (815) 875-3222
Form #716-0292-10M
© 1992 Schlage Lock Co.

4020T SERIES

SMOOTHEE®
SURFACE MOUNTED TRACK CLOSER

Specify finish (F), hand (H), and size (S) where indicated.

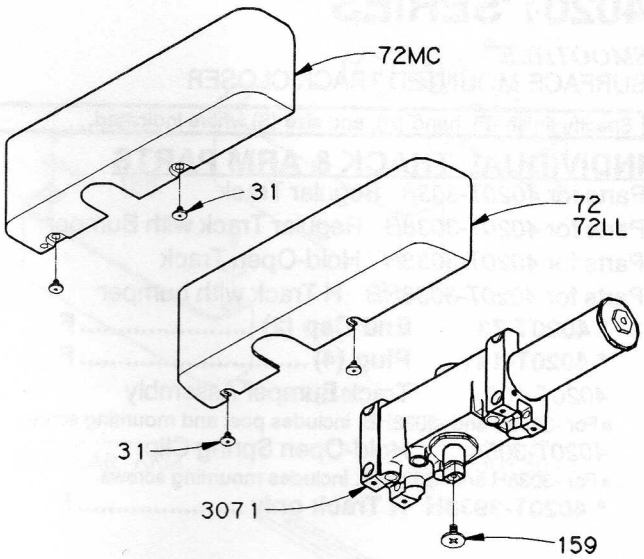

CYLINDER

4020T-3071 Cylinder Assembly ..... F,H,S
☐ SIZE: 3, 4.

COVER

4020T-72 Standard Cover ..... F
- Includes (2) 4020T-31.

4020T-72LL Lead Lined Cover ..... F
- Includes (2) 4020T-31.

4020T-72MC Metal Cover ..... F,H
- Includes (2) 4020T-31.

COMPLETE ARM

4020T-3077T Arm ..... F,H
- 180° maximum swing. Includes 4020T-159 and 4020T-425.

COMPLETE TRACK

4020T-3038 Regular Track ..... F

4020T-3038B Regular Track with bumper.. F
- 4020T-3038B includes bumper 4020T-169.

4020T-3038H Hold-Open Track..... F

4020T-3038HB H Track with bumper..... F
- 4020T-3038H includes hold-open clip 4020T-3054.
- 4020T-3038HB includes 4020T-169 and -3054.

INDIVIDUAL PARTS

***4020T-31 Cover Screw (2) ..... F**

***4020T-159 Arm Screw ..... F**

Prices for part numbers shown in ITALICS may be found in the LCN PRICE LIST. Prices for part numbers shown in **BOLD**, with a " * " may be found in the **LCN PARTS PRICE LIST.**

© 1992 Schlage Lock Co.
LCN CLOSERS, 121 W.Railroad Ave.,Princeton, IL 61356
Phone (815) 875-3311 Fax (815) 875-3222

4020T SERIES

SMOOTHEE®
SURFACE MOUNTED TRACK CLOSER

Specify finish (F), hand (H), and size (S) where indicated.

INDIVIDUAL TRACK & ARM PARTS

Parts for *4020T-3038* Regular Track
Parts for *4020T-3038B* Regular Track with Bumper
Parts for *4020T-3038H* Hold-Open Track
Parts for *4020T-3038HB* H Track with bumper

- *** 4020T-73 End Cap (2) ..... F**
- *** 4020T-141 Plug (4) ..... F**
- *4020T-169* Track Bumper Assembly
  - For -3038B and -3038HB. Includes post and mounting screw.
- *4020T-3054* Hold-Open Spring Clip
  - For -3038H and -3038HB. Includes mounting screws.
- *** 4020T-3938H H Track only ..... F**

Parts for *4020T-3077T* Arm

- *** 4020T-425 Roller Locking Screw ..... F**
- *4020T-3034* Track Roller

Prices for part numbers shown in ITALICS may be found in the LCN PRICE LIST. Prices for part numbers shown in **BOLD**, with a " * " may be found in the **LCN PARTS PRICE LIST.**

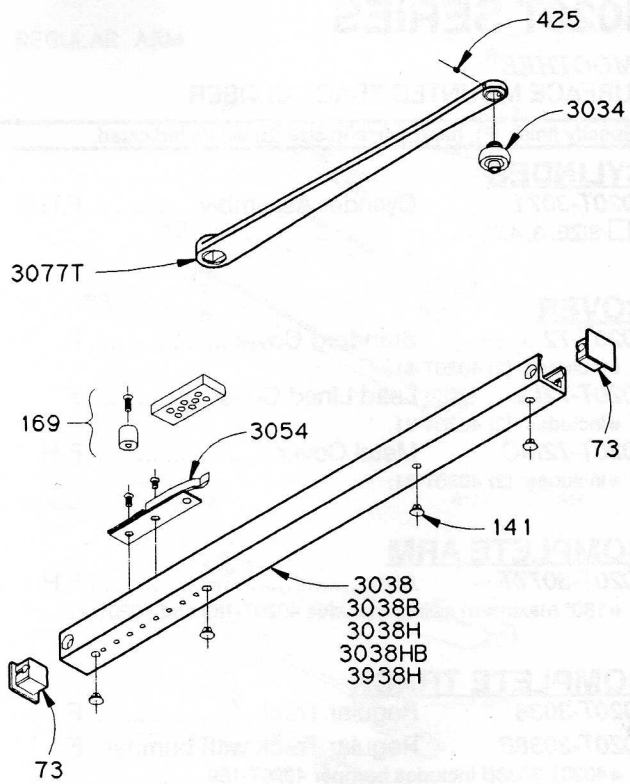

LCN CLOSERS, 121 W.Railroad Ave.,Princeton, IL 61356
Phone (815) 875-3311 Fax (815) 875-3222
Form #716-0292-10M
© 1992 Schlage Lock Co.

4030 SERIES

SMOOTHEE®
SURFACE MOUNTED CLOSER

Specify finish (F), hand (H), and size (S) where indicated.

CYLINDER

4030-3071 Cylinder Assembly ..... F,H,S
- Cylinder assembly includes mounting bracket.
- ☐ Size: 2, 3, 4.

COVER

4030-72 Standard Cover ..... F
- Includes (2) 4030-31.

4030-72MC Metal Cover ..... F
- Includes (2) 4030-31 and (2) -186.

COMPLETE ARM

4030-3077 Regular Arm..... F
- 180° maximum swing. Includes 4030-159.

4030-3049 Hold-Open Arm ..... F,H
- 140° maximum swing. Includes 4030-159.

INDIVIDUAL PARTS

Parts for *4030-72MC* Metal Cover

*** 4030-31**	**Cover Screw (2)**	**F**
*** 4030-186**	**Nut (2)**	**F**

Parts for *4030-3077* Regular Arm

*** 4030-32**	**Arm Screw**	**F**
*** 4030-77**	**Main Arm & Forearm**	**F**
4030-79	Rod & Shoe (w/–83)	F
*** 4030-83**	**Arm Set Screw**	**F**

Parts for *4030-3049* Hold-Open Arm

*** 4030-32**	**Arm Screw**	**F**
*** 4030-37**	**Hold-Open Stud**	**F,H**
*** 4030-41**	**Hold-Open Nut**	**F,H**
*** 4030-48**	**Forearm**	**F,H**
*** 4030-49**	**Hold-Open Main Arm**	**F,H**
4030-79	Rod & Shoe (w/–83)	F
*** 4030-83**	**Arm Set Screw**	**F**

Parts for 4030-3049FL arms, 4030-3049H180 arms, and old style (pre-1982 production) 4030 series closer arms are no longer available.

Prices for part numbers shown in ITALICS may be found in the LCN PRICE LIST. Prices for part numbers shown in **BOLD**, with a " * " may be found in the **LCN PARTS PRICE LIST.**

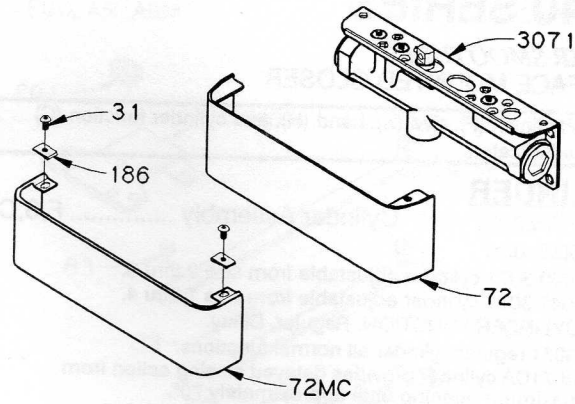

REGULAR ARM 4030-3077

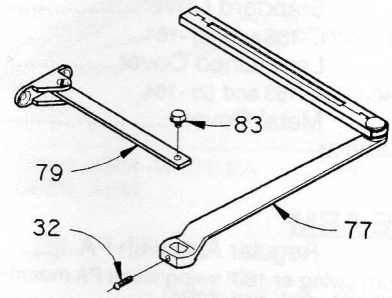

HOLD-OPEN ARM 4030-3049

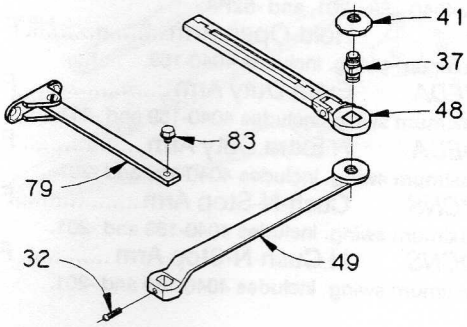

© 1992 Schlage Lock Co.
LCN CLOSERS, 121 W.Railroad Ave.,Princeton, IL 61356
Phone (815) 875-3311 Fax (815) 875-3222

4040 SERIES

SUPER SMOOTHEE®
SURFACE MOUNTED CLOSER

Specify finish (F), size (S), hand (H), and cylinder function (C) where indicated.

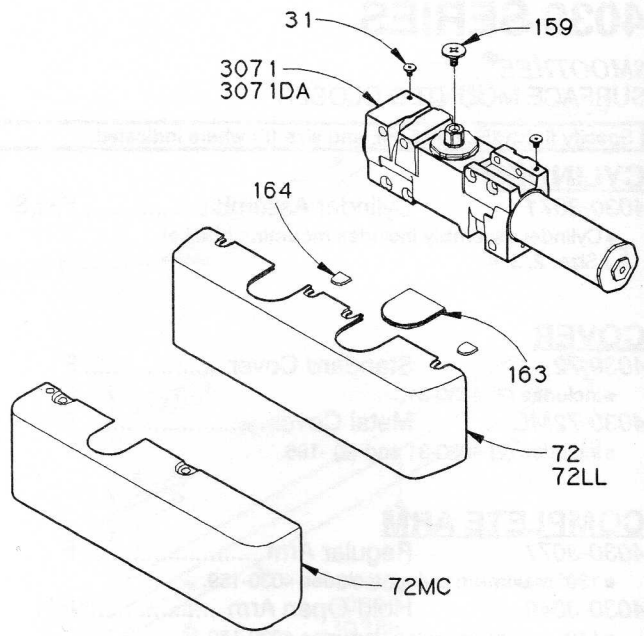

CYLINDER

4040-3071 Cylinder Assembly ..... F,S,C

☐ SIZE: 0, 1.
- 4040-3071 cylinder adjustable from size 2 thru 6.
- 4041-3071 cylinder adjustable from size 1 thru 4.

☐ CYLINDER FUNCTION: Regular, Delay.
- -3071 regular cylinder all normal functions.
- -3071DA cylinder provides delayed closing action from maximum opening until approximately 70°.

COVER

4040-72 Standard Cover ..... F
- Includes (2) 4040-31, -163 and (2) -164.

4040-72LL Lead Lined Cover ..... F
- Includes (2) 4040-31, -163 and (2) -164.

4040-72MC Metal Cover ..... F,H
- Includes (2) 4040-31.

COMPLETE ARM

4040-3077PA Regular Arm with PA ..... F
- 120° maximum swing or 180° swing when PA mounted. Includes 4040-159, -201, and -62PA.

4040-3077 Regular Arm..... F
- 120° maximum swing. Includes 4040-159.

4040-3049PA Hold-Open Arm with PA..... F
- 120° maximum swing or 180° swing when PA mounted. Includes 4040-159, -201, and -62PA.

4040-3049 Hold-Open Arm ..... F
- 120° maximum swing. Includes 4040-159.

4040-3077EDA Extra Duty Arm ..... F
- 180° maximum swing. Includes 4040-159 and -201.

4040-3049EDA H Extra Duty Arm ..... F,H
- 180° maximum swing. Includes 4040-159 and -201.

4040-3077CNS Cush-N-Stop Arm..... F
- 110° maximum swing. Includes 4040-159 and -201.

4040-3049CNS H Cush-N-Stop Arm ..... F
- 110° maximum swing. Includes 4040-159 and -201.

INDIVIDUAL PARTS

Parts for *4040-72* Cover

Parts for *4040-72LL* Lead Lined Cover

*** 4040-31 Cover Screw (2)..... F**
*** 4040-163 Arm Insert..... F**
*** 4040-164 Screw Insert (2) ..... F**

***4040-159 Arm Screw ..... F**

Prices for part numbers shown in ITALICS may be found in the LCN PRICE LIST. Prices for part numbers shown in **BOLD**, with a " * " may be found in the **LCN PARTS PRICE LIST.**

LCN CLOSERS, 121 W.Railroad Ave.,Princeton, IL 61356
Phone (815) 875-3311 Fax (815) 875-3222
Form #716-0292-10M
© 1992 Schlage Lock Co.

4040 SERIES

SUPER SMOOTHEE®
SURFACE MOUNTED CLOSER

Specify finish (F) where indicated.

INDIVIDUAL ARM PARTS

Parts for *4040-3077PA* Regular Arm with PA
Parts for *4040-3077* Regular Arm

- *** 4040-62PA** **PA Shoe (-3077PA only) .... F**
- *** 4040-77** **Main Arm & Forearm ..... F**
- *4040-79* Rod & Shoe (w/–83) ..... F
  - Length 6 3/8" (162mm).
- *4040-79LR* Long Rod & Shoe (w/–83) .... F
  - Length 8 3/8" (213mm). Substitute for -79 for reveals 2 5/8" (67mm) to 4 13/16" (122mm).
- *4040-79ELR* Extra Long Rod & Shoe ..... F
  - Length 12 3/8" (314mm). Includes -83. Substitute for -79 for reveals 4 7/8" (124mm) to 8" (203mm).
- *** 4040-83** **Arm Set Screw ..... F**
- *4040-201* 5th Screw Spacer

REGULAR ARM WITH PA 4040-3077PA
REGULAR ARM 4040-3077

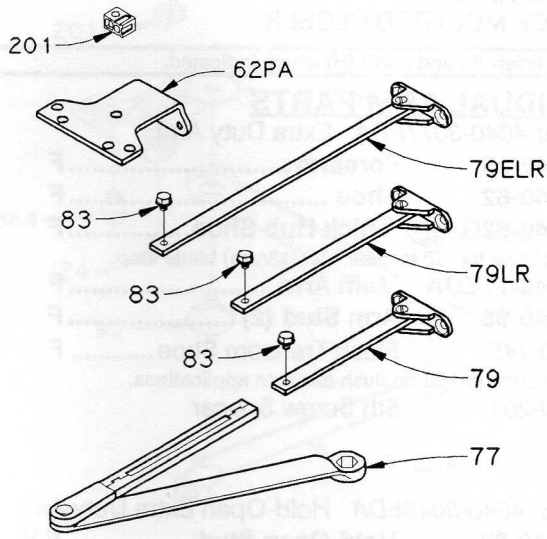

Parts for *4040-3049PA* Hold-Open Arm with PA
Parts for *4040-3049* Hold-Open Arm

- *** 4040-37** **Hold-Open Stud ..... F**
- *** 4040-41** **Hold-Open Nut ..... F**
- *** 4040-45** **Hold-Open Shoe ..... F**
- *** 4040-49** **H Main Arm and Rod (w/–83H) F**
- *** 4040-62PA** **PA Shoe (-3049PA only) .... F**
- *** 4040-78H** **H Head & Tube ..... F**
  - Length 5 3/4" (146mm).
- *** 4040-78HL** **H Head & Long Tube (w/–83H) F**
  - Length 8 5/8" (219mm). Substitute for -78H for reveals 2 5/8" (67mm) to 4 13/16" (122mm).
- *** 4040-83H** **H Arm Set Screw ..... F**
- *4040-201* 5th Screw Spacer

HOLD-OPEN ARM WITH PA 4040-3049PA
HOLD-OPEN ARM 4040-3049

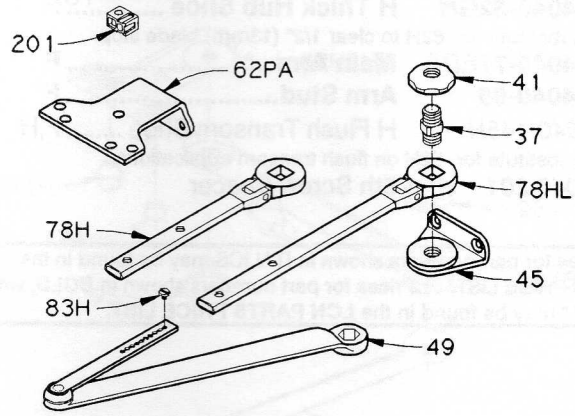

Prices for part numbers shown in ITALICS may be found in the LCN PRICE LIST. Prices for part numbers shown in **BOLD**, with a " * " may be found in the **LCN PARTS PRICE LIST.**

© 1992 Schlage Lock Co.
LCN CLOSERS, 121 W.Railroad Ave.,Princeton, IL 61356
Phone (815) 875-3311 Fax (815) 875-3222

4040 SERIES

SUPER SMOOTHEE®
SURFACE MOUNTED CLOSER

Specify finish (F) and hand (H) where indicated.

INDIVIDUAL ARM PARTS

Parts for *4040-3077EDA* Extra Duty Arm

*** 4040-35**	**Forearm**	**F**
*** 4040-62**	**Shoe**	**F**
*** 4040-62G**	**Thick Hub Shoe**	**F**
• Substitute for -62 to clear 1/2" (13mm) blade stop.		
*** 4040-77EDA**	**Main Arm**	**F**
*** 4040-95**	**Arm Stud (2)**	**F**
4040-145	Flush Transom Shoe	F
• Substitute for -62 on flush transom applications.		
4040-201	5th Screw Spacer	

Parts for *4040-3049EDA* Hold-Open Extra Duty Arm

*** 4040-37**	**Hold-Open Stud**	**F,H**
*** 4040-41**	**Hold-Open Nut**	**F,H**
*** 4040-48**	**Hold-Open Forearm**	**F,H**
*** 4040-62H**	**Hold-Open Shoe**	**F,H**
*** 4040-62GH**	**H Thick Hub Shoe**	**F**
• Substitute for -62H to clear 1/2" (13mm) blade stop.		
*** 4040-77EDA**	**Main Arm**	**F**
*** 4040-95**	**Arm Stud**	**F**
4040-145H	H Flush Transom Shoe	F,H
• Substitute for -62H on flush transom applications.		
4040-201	5th Screw Spacer	

Prices for part numbers shown in ITALICS may be found in the LCN PRICE LIST. Prices for part numbers shown in **BOLD**, with a " * " may be found in the **LCN PARTS PRICE LIST.**

EXTRA DUTY ARM 4040-3077EDA

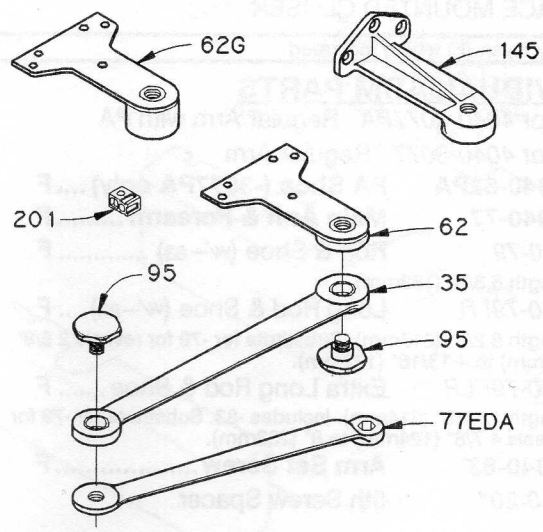

HOLD-OPEN EXTRA DUTY ARM 4040-3049EDA

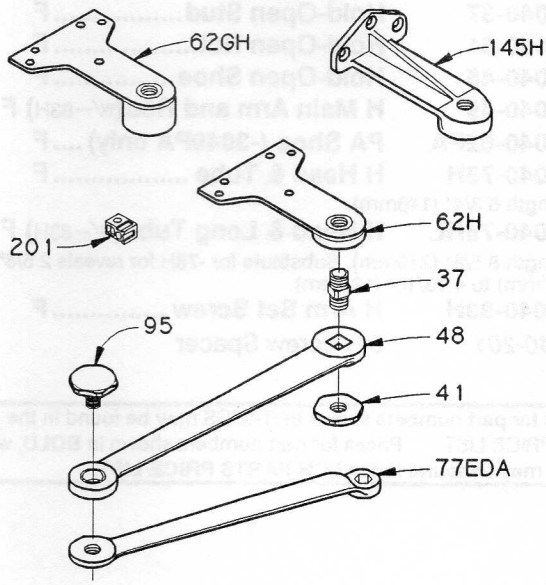

LCN CLOSERS, 121 W.Railroad Ave.,Princeton, IL 61356
Phone (815) 875-3311 Fax (815) 875-3222

Form #716-0292-10M

© 1992 Schlage Lock Co.

4040 SERIES

SUPER SMOOTHEE®
SURFACE MOUNTED CLOSER

Specify finish (F) and hand (H) where indicated.

INDIVIDUAL ARM PARTS

Parts for *4040-3077CNS* Cush-N-Stop Arm

*** 4040-35**	**Forearm**	**F**
*** 4040-62CNS**	**Cush Shoe**	**F**
*** 4040-77EDA**	**Main Arm**	**F**
*** 4040-95**	**Arm Stud (2)**	**F**
*** 4040-124**	**Plug**	**F**
4040-201	5th Screw Spacer	
*** 4040-384**	**Stop**	**F**

Parts for *4040-3049CNS* Hold-Open Cush-N-Stop Arm

*** 4040-62HCNS**	**H-Cush Shoe**	**F**
*** 4040-77EDA**	**Main Arm**	**F**
*** 4040-95**	**Arm Stud (2)**	**F**
*** 4040-124**	**Plug**	**F**
4040-201	5th Screw Spacer	
*** 4040-384**	**Stop**	**F**
*** 4040-3048**	**H-Cush Forearm**	**F**

Prices for part numbers shown in ITALICS may be found in the LCN PRICE LIST. Prices for part numbers shown in **BOLD**, with a " * " may be found in the **LCN PARTS PRICE LIST.**

CUSH-N-STOP ARM 4040-3077CNS

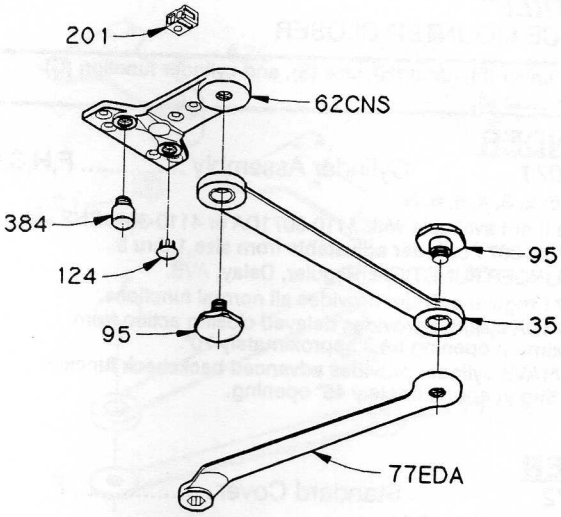

HOLD-OPEN CUSH-N-STOP ARM 4040-3049CNS

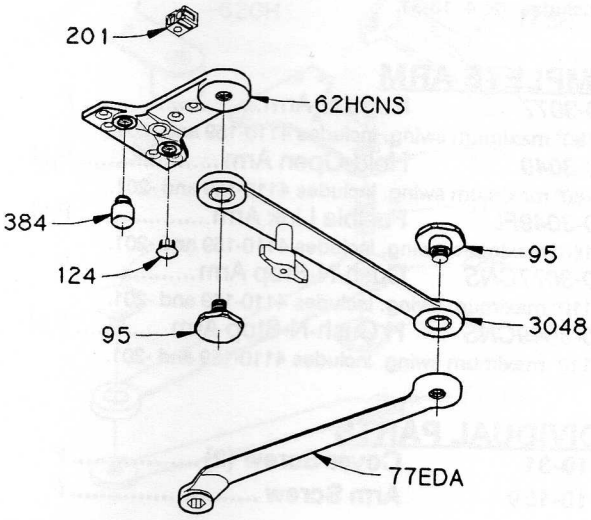

© 1992 Schlage Lock Co.
LCN CLOSERS, 121 W.Railroad Ave.,Princeton, IL 61356
Phone (815) 875-3311 Fax (815) 875-3222

4110 SERIES

SMOOTHEE®
SURFACE MOUNTED CLOSER

Specify finish (F), hand (H), size (S), and cylinder function (C) where indicated.

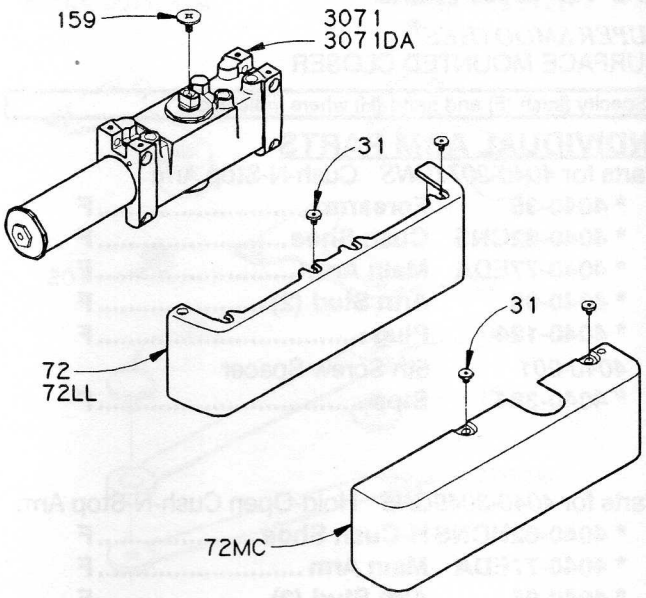

CYLINDER

4110-3071 Cylinder Assembly ..... F,H,S,C

☐ SIZE: 2, 3, 4, 5, 6, N.
- Size 6 not available with 4110-3071DA or 4110-3049CNS arm.
- 4110N-3071 cylinder adjustable from size 1 thru 5.

☐ CYLINDER FUNCTION: Regular, Delay, AVB.
- -3071 regular cylinder provides all normal functions.
- -3071DA cylinder provides delayed closing action from maximum opening until approximately 70°.
- -3071AVB cylinder provides advanced backcheck function starting at approximately 45° opening.

COVER

4110-72 Standard Cover ..... F
- Includes (2) 4110-31.

4110-72LL Lead Lined Cover ..... F
- Includes (2) 4110-31.

4110-72MC Metal Cover ..... F,H
- Includes (2) 4110-31.

COMPLETE ARM

4110-3077 Regular Arm..... F
- 180° maximum swing. Includes 4110-159 and -201.

4110-3049 Hold-Open Arm ..... F,H
- 180° maximum swing. Includes 4110-159 and -201.

4020-3049FL Fusible Link Arm..... F,H
- 180° maximum swing. Includes 4110-159 and -201.

4110-3077CNS Cush-N-Stop Arm..... F
- 110° maximum swing. Includes 4110-159 and -201.

4110-3049CNS H Cush-N-Stop Arm ..... F,H
- 110° maximum swing. Includes 4110-159 and -201.

INDIVIDUAL PARTS

***4110-31 Cover Screw (2) ..... F**

***4110-159 Arm Screw ..... F**

Parts for old style (pre-1982 production) 4110 Series closer arms are no longer available. These arms can be identified by the use of a horizontal (-32) arm screw instead of the current, vertical (-159) arm screw.

Prices for part numbers shown in ITALICS may be found in the LCN PRICE LIST. Prices for part numbers shown in **BOLD**, with a " * " may be found in the **LCN PARTS PRICE LIST.**

LCN CLOSERS, 121 W.Railroad Ave.,Princeton, IL 61356
Phone (815) 875-3311 Fax (815) 875-3222
Form #716-0292-10M
© 1992 Schlage Lock Co.

4110 SERIES

SMOOTHEE®
SURFACE MOUNTED CLOSER

Specify finish (F), hand (H), size (S), and cylinder function (C) where indicated.

INDIVIDUAL ARM PARTS

Parts for *4110-3077* Regular Arm

*** 4110-35**	**Forearm**	**F**
*** 4110-62**	**Shoe**	**F**
*** 4110-62G**	**Thick Hub Shoe**	**F**
• Substitute for -62 to clear 1/2" (13mm) blade stop.		
*** 4110-77EDA**	**Main Arm**	**F**
*** 4110-95**	**Arm Stud (2)**	**F**
4110-145	Flush Transom Shoe	F
• Substitute for -62 on flush transom applications.		
4110-201	5th Screw Spacer	

Parts for *4110-3049* Hold-Open Arm

*** 4110-37**	**Hold-Open Stud**	**F,H**
*** 4110-41**	**Hold-Open Nut**	**F,H**
*** 4110-48H**	**Hold-Open Forearm**	**F,H**
*** 4110-62H**	**Hold-Open Shoe**	**F,H**
*** 4110-62GH**	**H Thick Hub Shoe**	**F,H**
• Substitute for -62H to clear 1/2" (13mm) blade stop.		
*** 4110-77EDA**	**Main Arm**	**F**
*** 4110-95**	**Arm Stud**	**F**
4110-145H	H Flush Transom Shoe	F,H
• Substitute for -62H on flush transom applications.		
4110-201	5th Screw Spacer	

Parts for *4110-3049FL* Fusible Link Arm

*** 4110-9**	**Fusible Link & Spring Set**	
• Release Temperature 165°F standard; 125°F or 135°F optional.		
*** 4110-62FL**	**FL Hold-Open Shoe**	**F,H**
*** 4110-77EDA**	**Main Arm**	**F**
*** 4110-95**	**Arm Stud**	**F**
*** 4110-136**	**FL Forearm (w/-9)**	**F,H**
4110-201	5th Screw Spacer	

Parts for old style (pre-1982 production) 4110 Series closer arms are no longer available. These arms can be identified by the use of a horizontal (-32) arm screw instead of the current, vertical (-159) arm screw.

Prices for part numbers shown in ITALICS may be found in the LCN PRICE LIST. Prices for part numbers shown in **BOLD**, with a " * " may be found in the **LCN PARTS PRICE LIST.**

REGULAR ARM 4110-3077

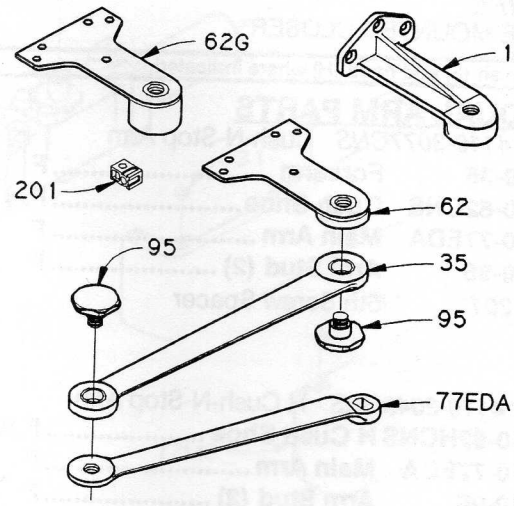

HOLD-OPEN ARM 4110-3049

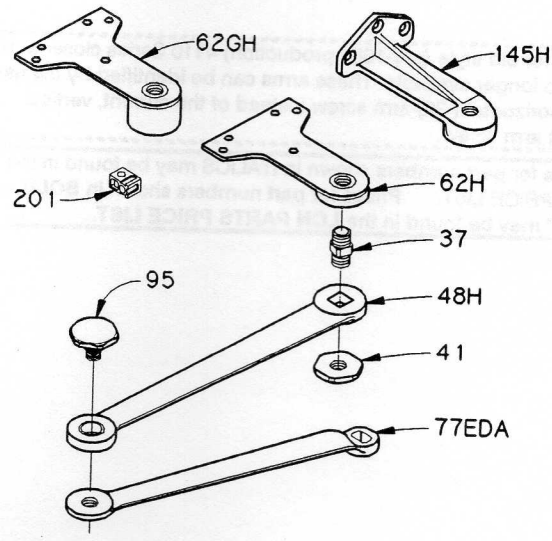

FUSIBLE LINK ARM 4110-3049FL

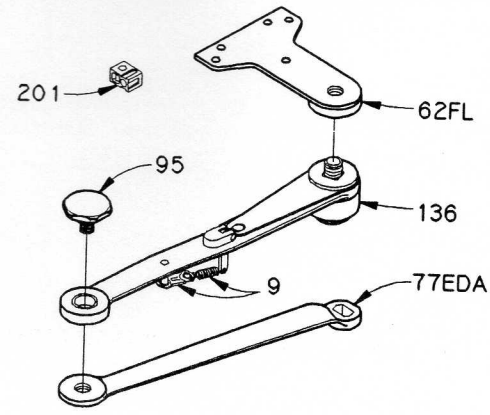

© 1992 Schlage Lock Co.
LCN CLOSERS, 121 W.Railroad Ave.,Princeton, IL 61356
Phone (815) 875-3311 Fax (815) 875-3222

4110 SERIES

SMOOTHEE®
SURFACE MOUNTED CLOSER

Specify finish (F) and hand (H) where indicated.

INDIVIDUAL ARM PARTS

Parts for *4110-3077CNS* Cush-N-Stop Arm

*** 4110-35**	**Forearm**	**F**
*** 4110-62CNS**	**Cush Shoe**	**F,H**
*** 4110-77EDA**	**Main Arm**	**F**
*** 4110-95**	**Arm Stud (2)**	**F**
4110-201	5th Screw Spacer	

Parts for *4110-3049CNS* H Cush-N-Stop Arm

*** 4110-62HCNS**	**H Cush Shoe**	**F,H**
*** 4110-77EDA**	**Main Arm**	**F**
*** 4110-95**	**Arm Stud (2)**	**F**
4110-201	5th Screw Spacer	
*** 4110-3048**	**H-Cush Forearm**	**F**

Parts for old style (pre-1982 production) 4110 Series closer arms are no longer available. These arms can be identified by the use of a horizontal (-32) arm screw instead of the current, vertical (-159) arm screw.

Prices for part numbers shown in ITALICS may be found in the LCN PRICE LIST. Prices for part numbers shown in **BOLD**, with a " * " may be found in the **LCN PARTS PRICE LIST.**

CUSH-N-STOP ARM 4110-3077CNS

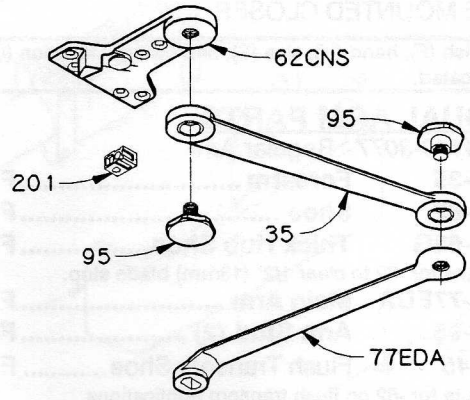

H CUSH-N-STOP ARM 4110-3049CNS

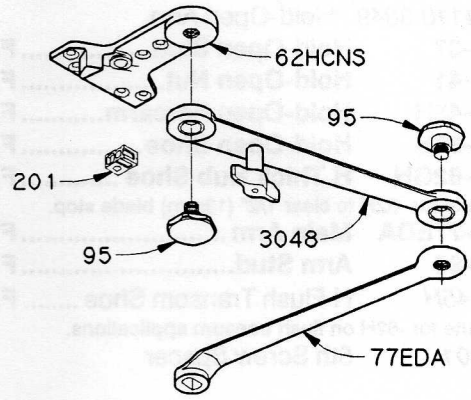

LCN CLOSERS, 121 W.Railroad Ave.,Princeton, IL 61356
Phone (815) 875-3311 Fax (815) 875-3222
Form #716-0292-10
© 1992 Schlage Lock C

4110T SERIES

SMOOTHEE®
SURFACE MOUNTED TRACK CLOSER

Specify finish (F), hand (H), and size (S) where indicated.

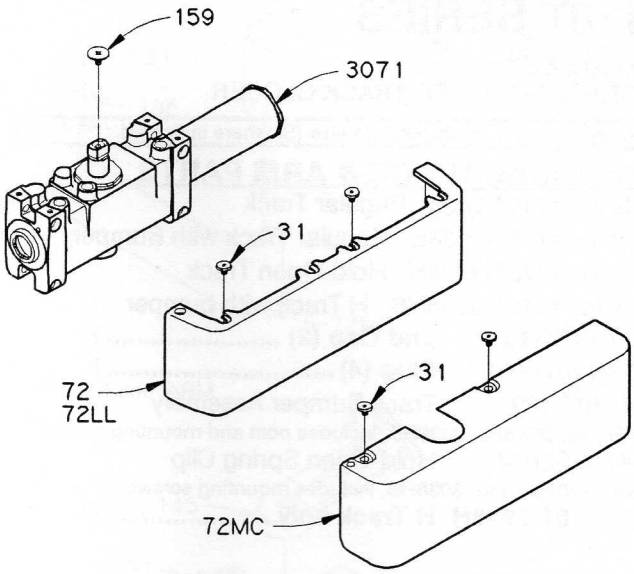

CYLINDER

4110T-3071 Cylinder Assembly ..... F,H,S
☐ Size: 3, 4

COVER

4110T-72 Cover ..... F
- Includes (2) 4110T-31.

4110T-72LL Lead Lined Cover ..... F
- Includes (2) 4110T-31.

4110T-72MC Metal Cover ..... F,H
- Includes (2) 4110T-31.

COMPLETE ARM

4110T-3077T Arm ..... F,H
- 110° maximum swing. Includes 4110T-159 and 4110T-425.

COMPLETE TRACK

4110T-3038 Regular Track ..... F

4110T-3038B Regular Track with bumper.. F
- 4110T-3038B includes bumper 4110T-169.

4110T-3038H Hold-Open Track..... F

4110T-3038HB H Track with bumper..... F
- 4110T-3038H includes hold-open clip 4110T-3054.
- 4110T-3038HB includes 4110T-169 and -3054.

INDIVIDUAL PARTS

***4110T-31 Screw (2) ..... F**

***4110T-159 Arm Screw ..... F**

Prices for part numbers shown in ITALICS may be found in the LCN PRICE LIST. Prices for part numbers shown in **BOLD**, with a " * " may be found in the **LCN PARTS PRICE LIST.**

© 1992 Schlage Lock Co.
LCN CLOSERS, 121 W.Railroad Ave.,Princeton, IL 61356
Phone (815) 875-3311 Fax (815) 875-3222

4110T SERIES

SMOOTHEE®
SURFACE MOUNTED TRACK CLOSER

Specify finish (F), hand (H), and size (S) where indicated.

INDIVIDUAL TRACK & ARM PARTS

Parts for *4110T-3038* Regular Track
Parts for *4110T-3038B* Regular Track with Bumper
Parts for *4110T-3038H* Hold-Open Track
Parts for *4110T-3038HB* H Track with bumper

- *** 4110T-73 End Cap (2) ..... F**
- *** 4110T-141-1 Plug (4) ..... F**
- *4110T-169* Track Bumper Assembly
  - For -3038B and -3038HB. Includes post and mounting screw.
- *4110T-3054* Hold-Open Spring Clip
  - For -3038H and -3038HB. Includes mounting screws.
- *** 4110T-3938H H Track only ..... F**

Parts for *4110T-3077T* Arm

- *** 4110T-425 Roller Locking Screw ..... F**
- *4110T-3034* Track Roller

Prices for part numbers shown in ITALICS may be found in the LCN PRICE LIST. Prices for part numbers shown in **BOLD**, with a " * " may be found in the **LCN PARTS PRICE LIST.**

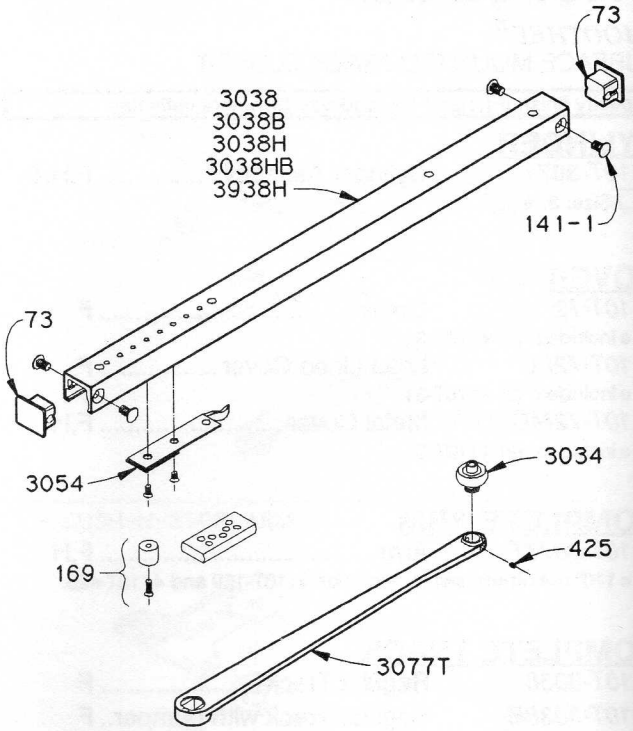

LCN CLOSERS, 121 W.Railroad Ave.,Princeton, IL 61356
Phone (815) 875-3311 Fax (815) 875-3222

© 1992 Schlage Lock C

4130 SERIES

SMOOTHEE®
SURFACE MOUNTED CLOSER

Specify finish (F), hand (H), and size (S) where indicated.

CYLINDER

4130-3071 Cylinder Assembly ..... F,H,S
- Cylinder assembly includes mounting bracket.

☐ SIZE: 2, 3.

COVER

4130-72 Standard Cover ..... F
- Includes (2) 4130-31.

4130-72MC Metal Cover ..... F,H
- Includes (2) 4130-31 and (2) 4130-186.

COMPLETE ARM

4130-3077 Regular Arm..... F
- 180° maximum swing. Includes 4130-159 and -201.

4130-3049 Hold-Open Arm ..... F,H
- 180° maximum swing. Includes 4130-159 and -201.

INDIVIDUAL PARTS

Parts for *4130-72MC* Metal Cover

*** 4130-31 Cover Screw (2)..... F**
*** 4130-186 Nut (2)..... F**

Parts for *4130-3077* Regular Arm

*** 4130-32 Arm Screw ..... F**
*** 4130-35 Forearm ..... F**
*** 4130-62 Shoe ..... F**
*** 4130-77EDA Main Arm ..... F**
*** 4130-95 Arm Stud..... F**
4130-145 Flush Transom Shoe ..... F
- Substitute for -62 on flush transom applications.

4130-201 5th Screw Spacer
*** 4130-421 Arm Stud..... F**

Parts for *4130-3049* Hold-Open Arm

*** 4130-32 Arm Screw ..... F**
*** 4130-37 Hold-Open Stud..... F,H**
*** 4130-41 Hold-Open Nut..... F,H**
*** 4130-48 Hold-Open Forearm..... F,H**
*** 4130-62H Hold-Open Shoe..... F,H**
*** 4130-77EDA Main Arm ..... F,H**
4130-145H H Flush Transom Shoe ..... F,H
- Substitute for -62H on flush transom applications.

4130-201 5th Screw Spacer
*** 4130-421 Arm Stud..... F**

Parts for 4130-3049FL arms are no longer available.

Prices for part numbers shown in ITALICS may be found in the LCN PRICE LIST. Prices for part numbers shown in **BOLD**, with a " * " may be found in the **LCN PARTS PRICE LIST.**

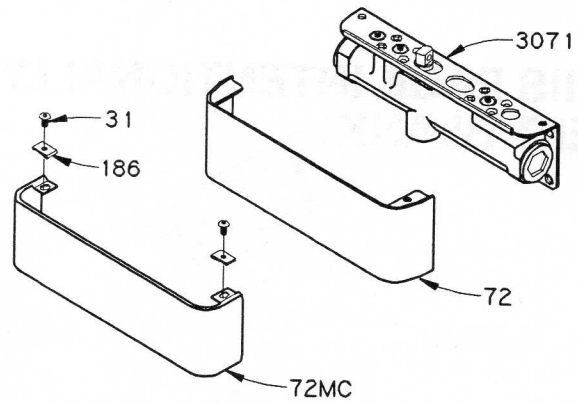

REGULAR ARM 4130-3077

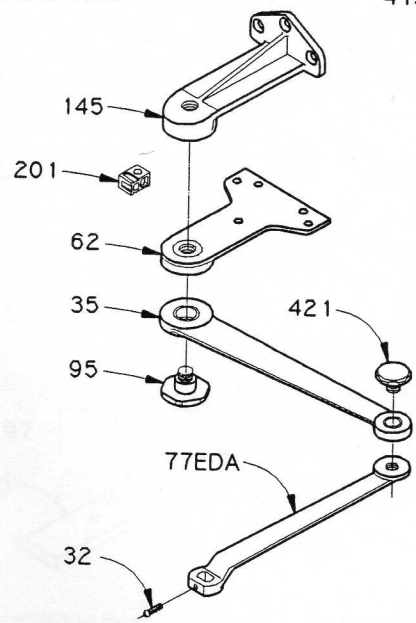

HOLD-OPEN ARM 4130-3049

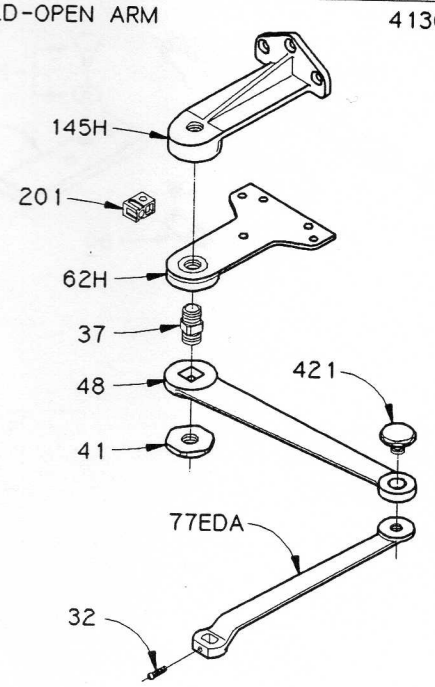

© 1992 Schlage Lock Co.
LCN CLOSERS, 121 W.Railroad Ave.,Princeton, IL 61356
Phone (815) 875-3311 Fax (815) 875-3222

THIS PAGE INTENTIONALLY LEFT BLANK

© 1992 Schlage Lock

330 SERIES

CONCEALED-IN-DOOR CLOSER

Specify finish (F), hand (H), and size (S) where indicated.

CYLINDER

330-3071 Cylinder Assembly ..... F,H,S

- Cylinder includes the mounting channel.

☐ SIZE: 2, 3, 4.

COMPLETE ARM

330-3077 Regular Arm..... F,H

- 180° maximum swing. Includes 330-159.

330-3049 Hold-Open Arm ..... F,H

- 140° maximum swing. Includes 330-159.

330-3049H180 180° Hold-Open Arm ..... F,H

- 180° maximum swing. Includes 330-159.

INDIVIDUAL ARM PARTS

Parts for *330-3077* Regular Arm

* 330-32	**Arm Screw**	F
* 330-45	**Plate Assembly** (w/–97)	F,H
* 330-77	**Main Arm & Forearm**	F,H
* 330-97	**Screw and Washer Set**	F

Parts for *330-3049* Hold-Open Arm

* 330-32	**Arm Screw**	F
* 330-37	**Hold-Open Stud**	F,H
* 330-41	**Hold-Open Nut**	F,H
* 330-45	**Shoe Assembly** (w/–97)	F,H
* 330-48	**Hold-Open Forearm**	F,H
* 330-49	**Hold-Open Main Arm**	F,H
* 330-97	**Screw and Washer Set**	F

Parts for *330-3049H180* 180° Hold-Open Arm

* 330-32	**Arm Screw**	F
* 330-45H	**H Shoe Assembly** (w/–97H)	F,H
* 330-49H	**H Main Arm & Forearm**	F,H
* 330-96	**Bushing Assembly**	F
* 330-97H	**H Stud and Washer Set**	F,H

Prices for part numbers shown in ITALICS may be found in the LCN PRICE LIST. Prices for part numbers shown in **BOLD**, with a " * " may be found in the **LCN PARTS PRICE LIST.**

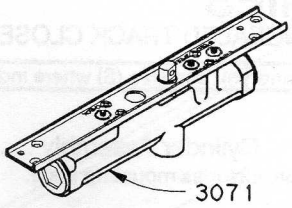

REGULAR ARM 330-3077

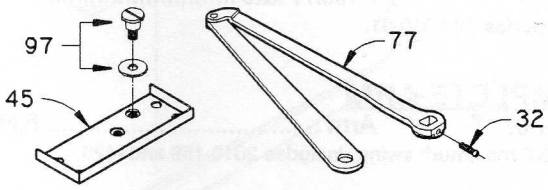

HOLD-OPEN ARM 330-3049

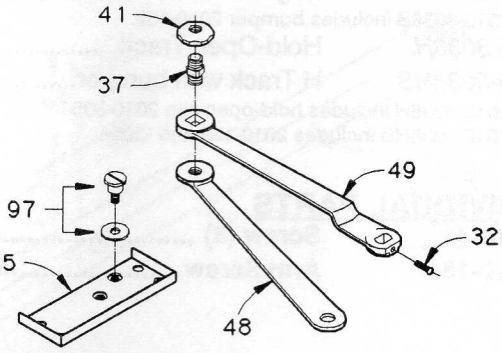

180° HOLD-OPEN ARM 330-3049H180

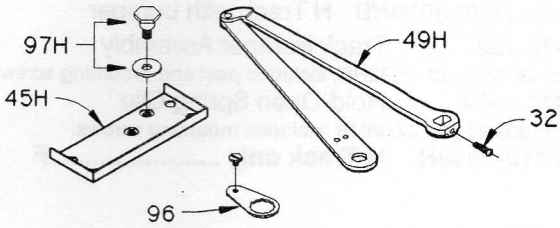

© 1992 Schlage Lock Co.
LCN CLOSERS, 121 W.Railroad Ave.,Princeton, IL 61356
Phone (815) 875-3311 Fax (815) 875-3222

2010 SERIES

OVERHEAD CONCEALED TRACK CLOSER

Specify finish (F), hand (H), and size (S) where indicated.

CYLINDER

2010-3071 Cylinder Assembly ..... F,H,S

- Cylinder assembly includes mounting plate.

☐ SIZE: 3, 4, 5, 6.

FINISH PLATE

2010-11 Finish Plate ..... F

- Includes (3) 2010-31.

COMPLETE ARM

2010-3077T Arm ..... F,H

- 180° maximum swing. Includes 2010-159 and -425.

COMPLETE TRACK

2010-3038 Regular Track ..... F

2010-3038B Regular Track with bumper.. F

- 2010-3038B includes bumper 2010-169.

2010-3038H Hold-Open Track..... F

2010-3038HB H Track with bumper..... F

- 2010-3038H includes hold-open clip 2010-3054.
- 2010-3038HB includes 2010-169 and -3054.

INDIVIDUAL PARTS

***2010-31 Screw (3) ..... F**

***2010-159 Arm Screw ..... F**

Parts for *2010-3038* Regular Track

Parts for *2010-3038B* Regular Track with Bumper

Parts for *2010-3038H* Hold-Open Track

Parts for *2010-3038HB* H Track with bumper

2010-169 Track Bumper Assembly

- For -3038B and -3038HB. Includes post and mounting screw.

2010-3054 Hold-Open Spring Clip

- For -3038H and -3038HB. Includes mounting screws.

*** 2010-3938H H Track only ..... F**

Parts for *2010-3077T* Arm

*** 2010-425 Roller Locking Screw ..... F**

2010-3034 Track Roller

Prices for part numbers shown in ITALICS may be found in the LCN PRICE LIST. Prices for part numbers listed in **BOLD**, with a " * " may be found in the **LCN PARTS PRICE LIST**.

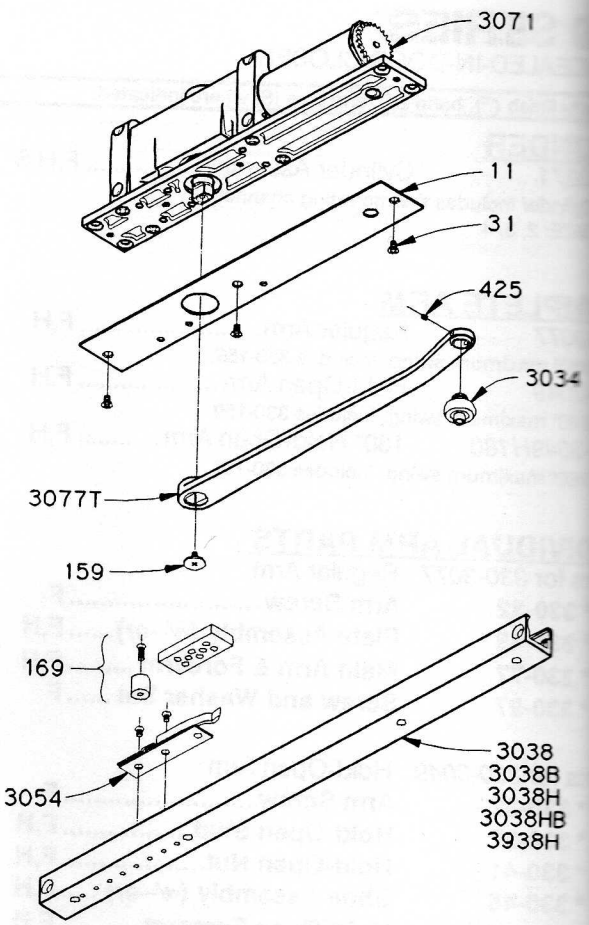

LCN CLOSERS, 121 W.Railroad Ave.,Princeton, IL 61356
Phone (815) 875-3311 Fax (815) 875-3222

Form #716-0292-10M

© 1992 Schlage Lock Co.

2030 SERIES

PACER®
OVERHEAD CONCEALED TRACK CLOSER

Specify finish (F), hand (H), and size (S) where indicated.

CYLINDER

2030-3071 Cylinder Assembly ..... F,H,S
- Cylinder assembly includes mounting/finish plate.
- ☐ SIZE: 3, 4, 5, 6.

COMPLETE ARM

2030-3077T Arm ..... F,H
- 180° maximum swing. Includes 2030-159 and -425.

COMPLETE TRACK

2030-3038 Regular Track ..... F

2030-3038B Regular Track with bumper.. F
- 2030-3038B includes bumper 2030-169.

2030-3038H Hold-Open Track..... F

2030-3038HB H Track with bumper..... F
- 2030-3038H includes hold-open clip 2030-3054.
- 2030-3038HB includes 2030-169 and -3054.

INDIVIDUAL PARTS

***2030-159 Arm Screw ..... F**

Parts for *2030-3038* Regular Track
Parts for *2030-3038B* Regular Track with Bumper
Parts for *2030-3038H* Hold-Open Track
Parts for *2030-3038HB* H Track with bumper

2030-169 Track Bumper Assembly
- For -3038B and -3038HB. Includes post and mounting screw.

2030-3054 Hold-Open Spring Clip
- For -3038H and -3038HB. Includes mounting screws.

*** 2030-3938H H Track only ..... F**

Parts for *2030-3077T* Arm

*** 2030-425 Roller Locking Screw ..... F**

2030-3034 Track Roller

Prices for part numbers shown in ITALICS may be found in the LCN PRICE LIST. Prices for part numbers shown in **BOLD**, with a " * " may be found in the **LCN PARTS PRICE LIST.**

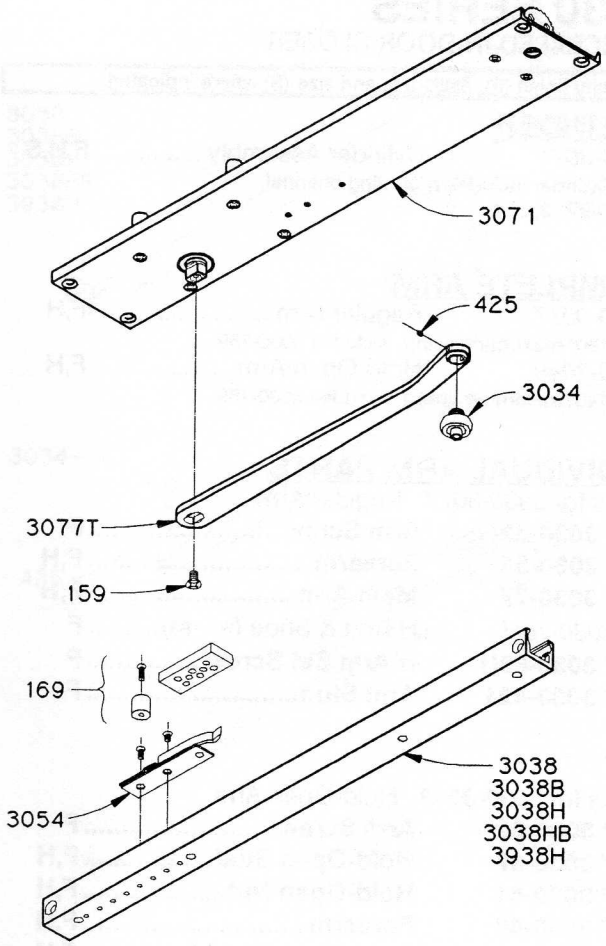

© 1992 Schlage Lock Co.
LCN CLOSERS, 121 W.Railroad Ave.,Princeton, IL 61356
Phone (815) 875-3311 Fax (815) 875-3222

3030 SERIES

CONCEALED-IN-DOOR CLOSER

Specify finish (F), hand (H), and size (S) where indicated.

CYLINDER

3030-3071 Cylinder Assembly ..... F,H,S

- Cylinder includes mounting channel.

☐ SIZE: 2, 3, 4.

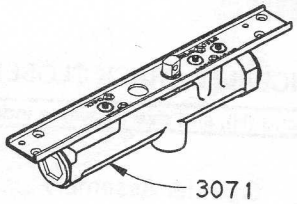

COMPLETE ARM

3030-3077 Regular Arm..... F,H

- 180° maximum swing. Includes 3030-159.

3030-3049 Hold-Open Arm ..... F,H

- 140° maximum swing. Includes 3030-159.

INDIVIDUAL ARM PARTS

Parts for *3030-3077* Regular Arm

*** 3030-32**	**Arm Screw**	**F**
*** 3030-35**	**Forearm**	**F,H**
*** 3030-77**	**Main Arm**	**F,H**
3030-79H	H Rod & Shoe (w/–83)	F
*** 3030-83H**	**H Arm Set Screw**	**F**
*** 3030-421**	**Arm Stud**	**F**

REGULAR ARM 3030-3077

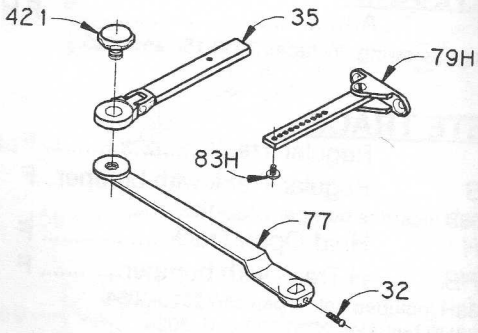

Parts for *3030-3049* Hold-Open Arm

*** 3030-32**	**Arm Screw**	**F**
*** 3030-37**	**Hold-Open Stud**	**F,H**
*** 3030-41**	**Hold-Open Nut**	**F,H**
*** 3030-48**	**Forearm**	**F,H**
*** 3030-49**	**Hold-Open Main Arm**	**F,H**
3030-79H	H Rod & Shoe (w/–83)	F
*** 3030-83H**	**H Arm Set Screw**	**F**

HOLD-OPEN ARM 3030-3049

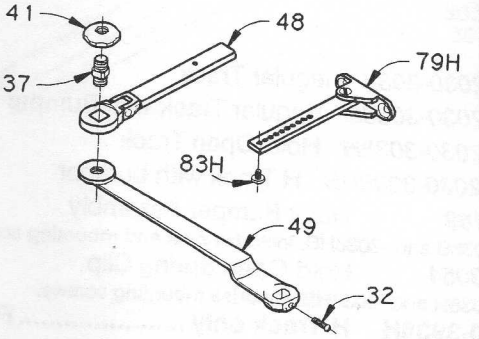

Parts for 3030-3049FL arms are no longer available.

Prices for part numbers shown in ITALICS may be found in the LCN PRICE LIST. Prices for part numbers shown in **BOLD**, with a " * " may be found in the **LCN PARTS PRICE LIST.**

LCN CLOSERS, 121 W.Railroad Ave.,Princeton, IL 61356
Phone (815) 875-3311 Fax (815) 875-3222

Form #716-0292-10M

© 1992 Schlage Lock Co.

3130 SERIES

CONCEALED-IN-DOOR TRACK CLOSER

Specify finish (F), hand (H), and size (S) where indicated.

CYLINDER

3130-3071 Cylinder Assembly ..... F,H,S

- Cylinder includes mounting channel.

☐ SIZE: 2, 3.

COMPLETE ARM

3130-3077T Arm ..... F,H

- 140° maximum swing. Includes 3130-159.

COMPLETE TRACK

3130-3038 Regular Track ..... F

3130-3038B Regular Track with bumper.. F

- 3130-3038B includes bumper 3130-169.

3130-3038H Hold-Open Track..... F

3130-3038HB H Track with bumper..... F

- 3130-3038H includes hold-open clip 3130-3054.
- 3130-3038HB includes 3130-169 and -3054.

INDIVIDUAL PARTS

Parts for *3130-3038* Regular Track

Parts for *3130-3038B* Regular Track with Bumper

Parts for *3130-3038H* Hold-Open Track

Parts for *3130-3038HB* H Track with bumper

3130-169 Track Bumper Assembly

- For -3038B and -3038HB. Includes post and mounting screw.

3130-3054 Hold-Open Spring Clip

- For -3038H and -3038HB. Includes mounting screws.

*** 3130-3938H H Track only ..... F**

Parts for *3130-3077T* Arm

*** 3130-32 Arm Screw ..... F**

*** 3130-425 Roller Locking Screw ..... F**

3130-3034 Track Roller

Prices for part numbers shown in ITALICS may be found in the LCN PRICE LIST. Prices for part numbers shown in **BOLD**, with a " * " may be found in the **LCN PARTS PRICE LIST.**

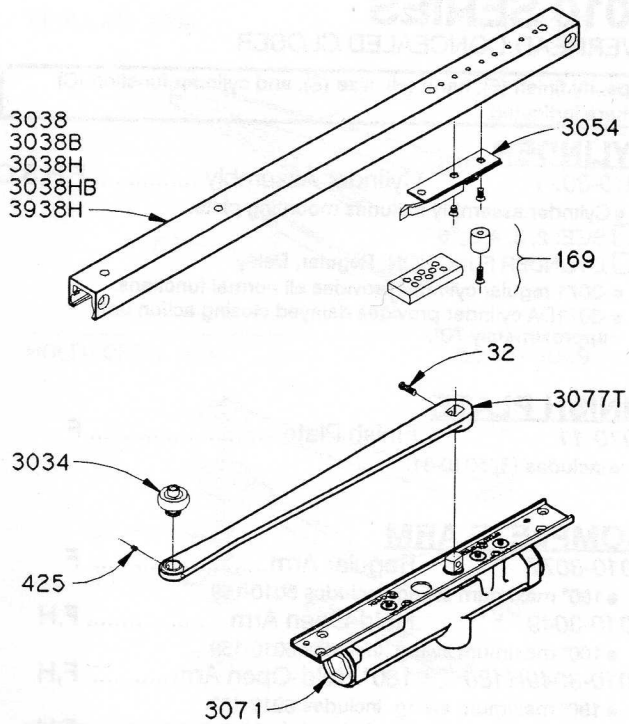

© 1992 Schlage Lock Co.
LCN CLOSERS, 121 W.Railroad Ave.,Princeton, IL 61356
Phone (815) 875-3311 Fax (815) 875-3222

5010 SERIES

OVERHEAD CONCEALED CLOSER

Specify finish (F), hand (H), size (S), and cylinder function (C) where indicated.

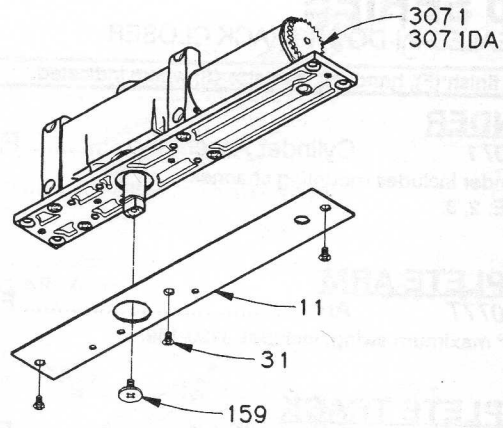

CYLINDER

5010-3071 Cylinder Assembly ..... F,H,S,C

- Cylinder assembly includes mounting plate.

☐ SIZE: 2, 3, 4, 5, 6

☐ CYLINDER FUNCTION: Regular, Delay

- -3071 regular cylinder provides all normal functions.
- -3071DA cylinder provides delayed closing action until approximately 70°.

FINISH PLATE

5010-11 Finish Plate ..... F

- Includes (3) 5010-31.

COMPLETE ARM

5010-3077 Regular Arm..... F

- 180° maximum swing. Includes 5010-159.

5010-3049 Hold-Open Arm ..... F,H

- 100° maximum swing. Includes 5010-159.

5010-3049H180 180° Hold-Open Arm ..... F,H

- 180° maximum swing. Includes 5010-159.

5010-3049FL Fusible Link Arm..... F,H

- 100° maximum swing. Includes 5010-159.

INDIVIDUAL PARTS

***5010-31** **Screw (3)** ..... **F**

***5010-159** **Arm Screw** ..... **F**

Parts for old style (pre-1982 production) 5010 Series closer arms are no longer available. These arms can be identified by the use of a horizontal (-32) arm screw instead of the current, vertical (-159) arm screw.

Prices for part numbers shown in ITALICS may be found in the LCN PRICE LIST. Prices for part numbers shown in **BOLD**, with a " * " may be found in the **LCN PARTS PRICE LIST.**

LCN CLOSERS, 121 W.Railroad Ave.,Princeton, IL 61356
Phone (815) 875-3311 Fax (815) 875-3222

Form #716-0292-10M

© 1992 Schlage Lock Co

5010 SERIES

OVERHEAD CONCEALED CLOSER

Specify finish (F) and hand (H) where indicated.

INDIVIDUAL ARM PARTS

Parts for *5010-3077* Regular Arm

*** 5010-77**	**Main Arm & Forearm**	**F**
5010-79	Rod & Shoe (w/–83)	F
*** 5010-83**	**Arm Set Screw**	**F**

Parts for *5010-3049* Hold-Open Arm

*** 5010-37**	**Hold-Open Stud**	**F,H**
*** 5010-41**	**Hold-Open Nut**	**F,H**
*** 5010-48**	**Hold-Open Forearm**	**F,H**
*** 5010-49**	**Hold-Open Main Arm**	**F,H**
5010-79H	H Rod & Shoe (w/–83)	F,H
*** 5010-83H**	**H Arm Set Screw**	**F,H**

Parts for *5010-3049H180* 180° Hold-Open Arm

*** 5010-36**	**180° H Forearm**	**F,H**
*** 5010-37**	**Hold-Open Stud**	**F,H**
*** 5010-41**	**Hold-Open Nut**	**F,H**
*** 5010-45**	**Hold-Open Shoe**	**F,H**
*** 5010-49H**	**H Main Arm**	**F,H**
*** 5010-95**	**Arm Stud**	**F,H**

Parts for *5010-3049FL* Fusible Link Arm

*** 5010-9**	**Fusible Link & Spring Set**	

- Release Temperature 165°F standard; 125°F or 135°F optional.

*** 5010-37FL**	**FL Hold-Open Stud**	**F,H**
*** 5010-41**	**Hold-Open Nut**	**F,H**
*** 5010-49**	**Hold-Open Main Arm**	**F,H**
5010-79H	H Rod & Shoe (w/–83)	F,H
*** 5010-83H**	**H Arm Set Screw**	**F,H**
*** 5010-136**	**FL Forearm (w/–9)**	**F,H**

Parts for old style (pre-1982 production) 5010 Series closer arms are no longer available. These arms can be identified by the use of a horizontal (-32) arm screw instead of the current, vertical (-159) arm screw.

Prices for part numbers shown in ITALICS may be found in the LCN PRICE LIST. Prices for part numbers shown in **BOLD**, with a " * " may be found in the **LCN PARTS PRICE LIST.**

REGULAR ARM 5010-3077

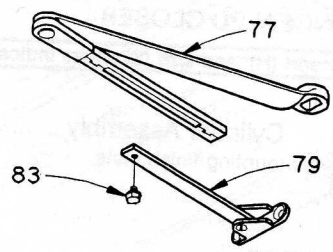

HOLD-OPEN ARM 5010-3049

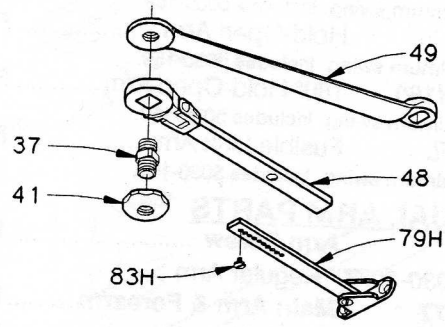

180° HOLD-OPEN ARM 5010-3049H180

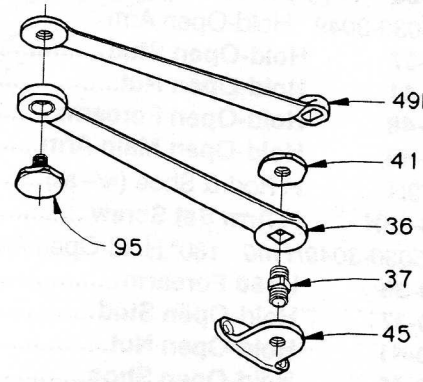

FUSIBLE LINK ARM 5010-3049FL

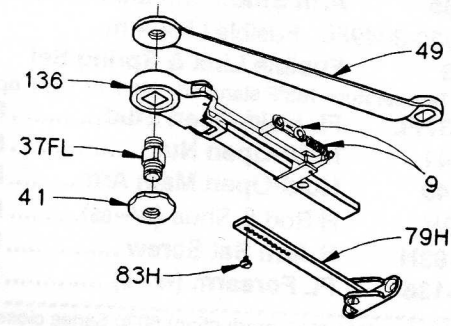

© 1992 Schlage Lock Co.
LCN CLOSERS, 121 W.Railroad Ave.,Princeton, IL 61356
Phone (815) 875-3311 Fax (815) 875-3222

5030 SERIES

PACER®
OVERHEAD CONCEALED CLOSER

Specify finish (F), hand (H), and size (S) where indicated.

CYLINDER

5030-3071 Cylinder Assembly ..... F,H,S
- Cylinder includes mounting/finish plate.
- ☐ SIZE: 3, 4, 5, 6.

COMPLETE ARM

5030-3077 Regular Arm..... F,H
- 180° maximum swing. Includes 5030-159.

5030-3049 Hold-Open Arm ..... F,H
- 100° maximum swing. Includes 5030-159.

5030-3049H180 180° Hold-Open Arm ..... F,H
- 180° maximum swing. Includes 5030-159.

5030-3049FL Fusible Link Arm..... F,H
- 100° maximum swing. Includes 5030-159.

INDIVIDUAL ARM PARTS

***5030-159 Arm Screw** ..... F

Parts for *5030-3077* Regular Arm
- *** 5030-77 Main Arm & Forearm ..... F,H**
- *5030-79* Rod & Shoe (w/–83) ..... F
- *** 5030-83 Arm Set Screw..... F**

Parts for *5030-3049* Hold-Open Arm
- *** 5030-37 Hold-Open Stud..... F,H**
- *** 5030-41 Hold-Open Nut..... F,H**
- *** 5030-48 Hold-Open Forearm..... F,H**
- *** 5030-49 Hold-Open Main Arm..... F,H**
- *5030-79H* H Rod & Shoe (w/–83)..... F
- *** 5030-83H H Arm Set Screw ..... F**

Parts for *5030-3049H180* 180° Hold-Open Arm
- *** 5030-36 H180 Forearm..... F,H**
- *** 5030-37 Hold-Open Stud..... F,H**
- *** 5030-41 Hold-Open Nut..... F,H**
- *** 5030-45 Hold-Open Shoe..... F,H**
- *** 5030-49H H Main Arm ..... F,H**
- *** 5030-95 Arm Stud..... F**

Parts for *5030-3049FL* Fusible Link Arm
- *** 5030-9 Fusible Link & Spring Set**
  - Release Temperature 165°F standard; 125°F or 135°F optional.
- *** 5030-37FL FL Hold-Open Stud..... F,H**
- *** 5030-41 Hold-Open Nut..... F,H**
- *** 5030-49 Hold-Open Main Arm..... F,H**
- *5030-79H* H Rod & Shoe (w/–83)..... F
- *** 5030-83H H Arm Set Screw ..... F**
- *** 5030-136 FL Forearm (w/–9) ..... F,H**

Parts for old style (pre-1982 production) 5030 Series closer arms are no longer available. These arms can be identified by the use of a horizontal (-32) arm screw.

Prices for part numbers shown in ITALICS may be found in the LCN PRICE LIST. Prices for part numbers shown in **BOLD**, with a " * " may be found in the **LCN PARTS PRICE LIST.**

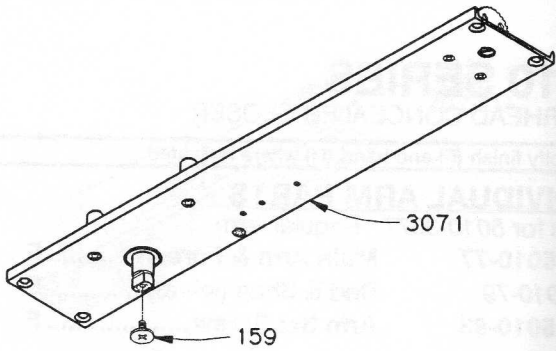

REGULAR ARM 5030-3077

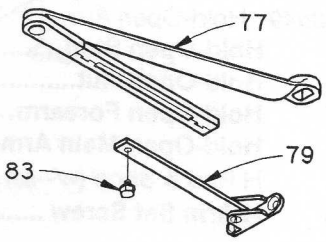

HOLD-OPEN ARM 5030-3049

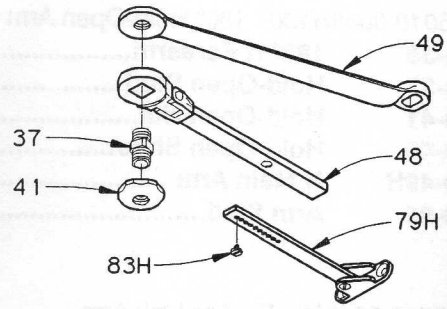

180° HOLD-OPEN ARM 5030-3049H180

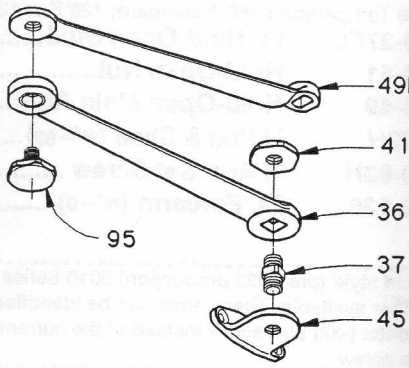

FUSIBLE LINK ARM 5030-3049FL

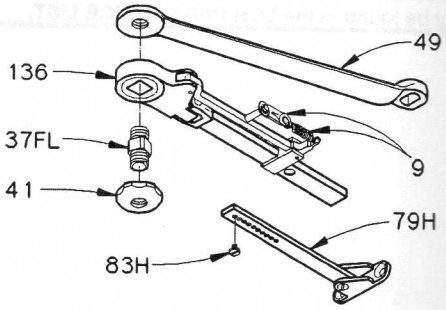

LCN CLOSERS, 121 W.Railroad Ave.,Princeton, IL 61356
Phone (815) 875-3311 Fax (815) 875-3222

© 1992 Schlage Lock

6030 SERIES

PACER®
OVERHEAD CONCEALED CLOSER

Specify finish (F) and size (S) where indicated.

CYLINDER

6030-3071 Cylinder Assembly ..... F,S
- Cylinder includes mounting/finish plate.
- ☐ SIZE: 3, 4, 5.

COMPLETE ARM

6030-3077T Arm ..... F
- 95° maximum swing. Includes 6030-159.

COMPLETE TRACK

6030-3038B Regular Track with bumper.. F
- 6030-3038B includes bumper 2030-169.

6030-3038HB H Track with bumper..... F
- 6030-3038HB includes 6030-169 and -3054.

INDIVIDUAL PARTS

***6030-159 Arm Screw ..... F**

Parts for *6030-3038B* Regular Track with Bumper
Parts for *6030-3038HB* H Track with bumper

6030-169 Track Bumper Assembly
- For -3038B and -3038HB. Includes post and mounting screw.

6030-3054 Hold-Open Spring Clip
- For -3038H and -3038HB. Includes mounting screws.

*** 6030-3938H H Track only ..... F**

Parts for *6030-3077T* Arm

*** 6030-83 Arm Set Screw..... F**
*** 6030-425 Roller Locking Screw ..... F**
6030-3034 Track Roller

Prices for part numbers shown in ITALICS may be found in the LCN PRICE LIST. Prices for part numbers shown in **BOLD**, with a " * " may be found in the **LCN PARTS PRICE LIST.**

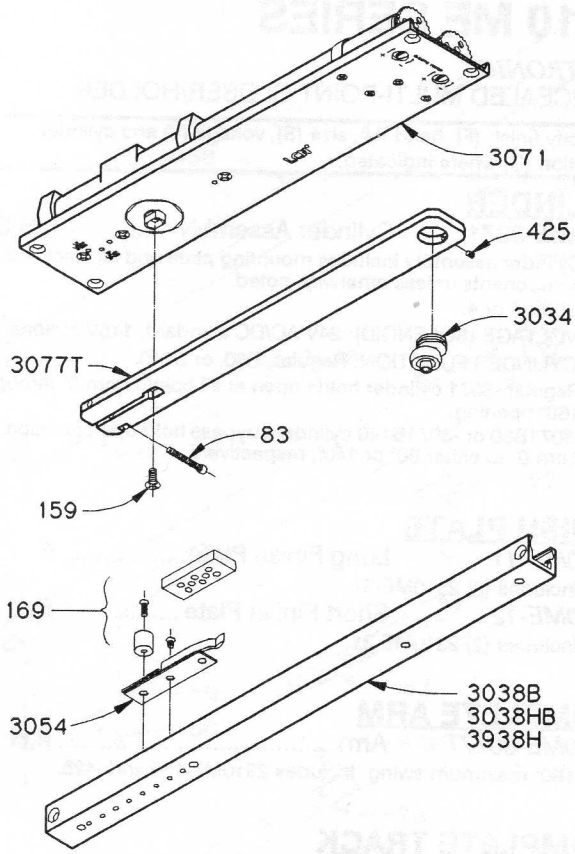

© 1992 Schlage Lock Co.
LCN CLOSERS, 121 W.Railroad Ave.,Princeton, IL 61356
Phone (815) 875-3311 Fax (815) 875-3222

2310 ME SERIES

SENTRONIC®
CONCEALED MULTI-POINT CLOSER/HOLDER

Specify finish (F), hand (H), size (S), voltage (V) and cylinder function (C) where indicated.

CYLINDER

2310ME-3071 Cylinder Assembly ..... F,H,S,V,C

- Cylinder assembly includes mounting plate and all electronic components unless otherwise noted.

☐ SIZE: 3 or 4.
☐ VOLTAGE (SOLENOID): 24V AC/DC standard, 115V optional.
☐ CYLINDER FUNCTION: Regular, B80, or B140.

- Regular -3071 cylinder holds-open at all points from 0° through 160° opening.
- -3071B80 or -3071B140 cylinders bypass hold-open function from 0° to either 80° or 140°, respectively.

FINISH PLATE

2310ME-11 Long Finish Plate..... F

- Includes (2) 2310ME-31.

2310ME-12 Short Finish Plate ..... F

- Includes (2) 2310ME-31.

COMPLETE ARM

2310ME-3077T Arm ..... F,H

- 180° maximum swing. Includes 2310ME-159 and -425.

COMPLETE TRACK

2310ME-3038 Track

INDIVIDUAL PARTS

***2310ME-31 Screw (4) ..... F**
***2310ME-159 Arm Screw ..... F**

Parts for *2310ME-3071* Cylinder Assembly

*** 2310ME-172 Wiring Cover**
*** 2310ME-3351 On/Off Switch Assembly ... V**

- 3 wire, 6" (152mm) length.

☐ 24V AC/DC standard, 115V optional.

2310ME-3971 Cylinder Only..... F,H,S,V,C

- -3971 cylinder includes solenoid but does not include mounting plate or other electrical components.

☐ SIZE: 3 or 4.
☐ VOLTAGE (SOLENOID): 24V AC/DC standard, 115V optional.
☐ CYLINDER FUNCTION: Regular, B80, or B140.

Parts for *2310ME-3077T* Arm

*** 2310ME-425 Roller Locking Screw ..... F**
2310ME-3034 Track Roller

2310ME-3166 solenoid assembly is not available as a separate part.

Prices for part numbers shown in ITALICS may be found in the LCN PRICE LIST. Prices for part numbers shown in **BOLD**, with a " * " may be found in the **LCN PARTS PRICE LIST.**

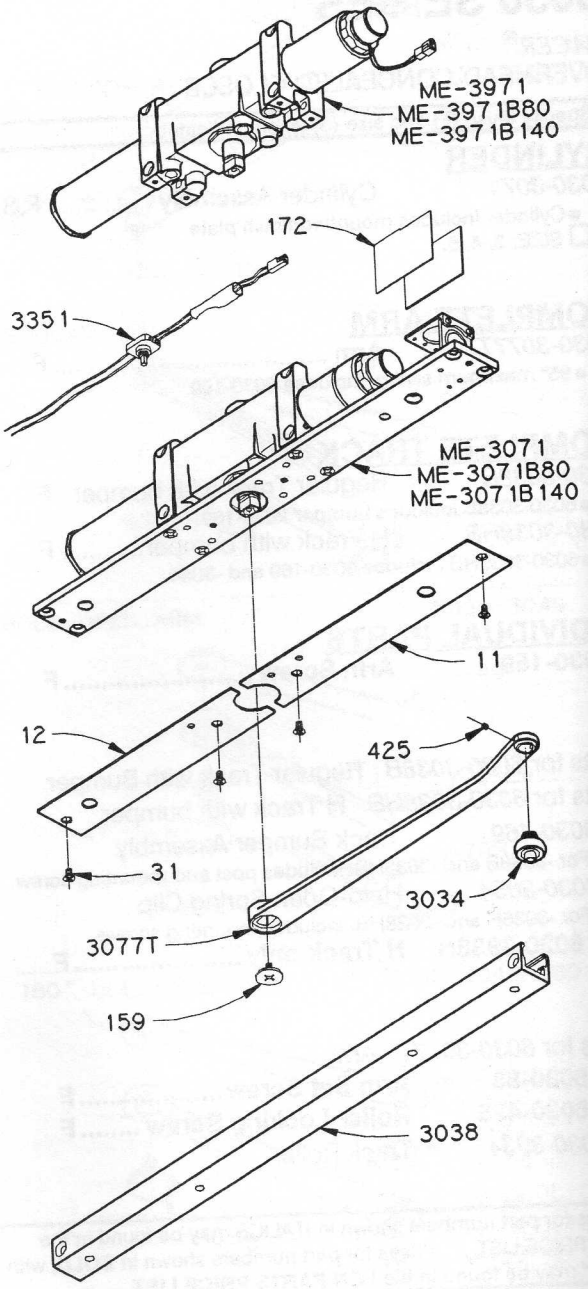

LCN CLOSERS, 121 W.Railroad Ave.,Princeton, IL 61356
Phone (815) 875-3311 Fax (815) 875-3222

Form #716-0250
© 1992 Schlage Lock

3130 SE SERIES

SENTRONIC®
CONCEALED SINGLE POINT CLOSER/HOLDER

Specify finish (F), hand (H), size (S), voltage (V) where indicated.

CYLINDER

3130SE-3071 Cylinder Assembly ..... F,H,S
- Cylinder assembly includes mounting channel.

☐ SIZE: 3, 4.

COMPLETE ARM

3130SE-3077T Arm ..... F,H
- 110° maximum swing. Includes 3130SE-159 and -425.

3130SEL-3077T Long Arm ..... F,H
- For 3130SEL-3038 track only! 130° max. swing. Includes 3130SE-159.

COMPLETE TRACK

3130SE-3038 Track V
- Length 22 3/4" (578mm).

☐ VOLTAGE (SOLENOID): 24V AC/DC standard, 115V optional.

3130SEL-3038 Long Track V
- Use with 3130SEL-3077T arm only! Length 25 3/4" (654mm).

☐ VOLTAGE (SOLENOID): 24V AC/DC standard, 115V optional.

INDIVIDUAL PARTS

Parts for *3130SE-3038* Track

Parts for *3130SEL-3038* Long Track

- *** 3130SE-59 Cover Plate ..... F**
- *** 3130SE-60 Cover Plate Screw (3)..... F**
- *** 3130SE-73 End Cap (2) ..... F**
- *** 3130SE-168 Yoke**

Parts for *3130SE-3077T Arm*

- *** 3130SE-32 Arm Screw ..... F**
- *** 3130SE-78 Arm and Tube (w/–83H)..... F,H**
- *** 3130SE-82 Rod (w/–425)..... F**
- *** 3130SE-83H Arm Set Screw..... F**
- *** 3130SE-425 Roller Locking Screw ..... F**
- *3130SE-3034* Track Roller

Parts for *3130SEL-3077T* Long Arm

- *** 3130SE-32 Arm Screw ..... F**
- *** 3130SE-425 Roller Locking Screw ..... F**
- *3130SE-3034* Track Roller

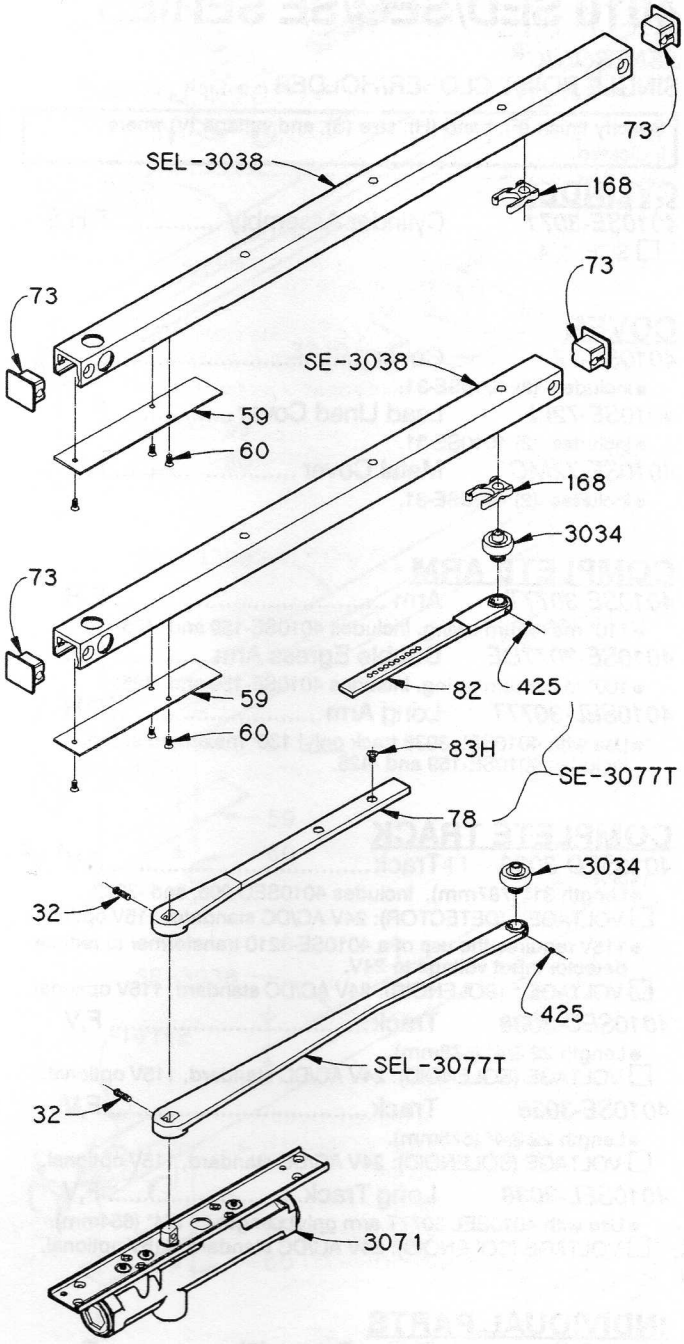

Unless otherwise noted all parts are used for both the SE and the SEL series products.

3130SE-3166 or 3130SEL-3166 solenoid assemblies are not available as a separate part.

Prices for part numbers shown in ITALICS may be found in the LCN PRICE LIST. Prices for part numbers shown in **BOLD**, with a " * " may be found in the **LCN PARTS PRICE LIST.**

© 1992 Schlage Lock Co.
LCN CLOSERS, 121 W.Railroad Ave.,Princeton, IL 61356
Phone (815) 875-3311 Fax (815) 875-3222

4010 SED/SEC/SE SERIES

SENTRONIC®
SINGLE POINT CLOSER/HOLDER

Specify finish (F), hand (H), size (S), and voltage (V) where indicated.

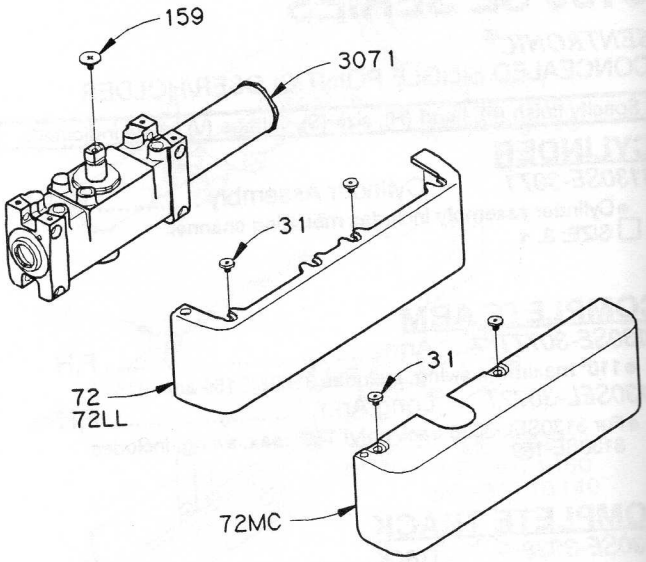

CYLINDER

4010SE-3071 Cylinder Assembly ..... F,H,S
☐ SIZE: 3, 4.

COVER

4010SE-72 Cover ..... F
- Includes (2) 4010SE-31.

4010SE-72LL Lead Lined Cover ..... F
- Includes (2) 4010SE-31.

4010SE-72MC Metal Cover ..... F,H
- Includes (2) 4010SE-31.

COMPLETE ARM

4010SE-3077T Arm ..... F,H
- 110° maximum swing. Includes 4010SE-159 and -425.

4010SE-3077DE Double Egress Arm ..... F,H
- 100° maximum swing. Includes 4010SE-159 and -425.

4010SEL-3077T Long Arm ..... F,H
- Use with 4010SEL-3038 track only! 130° maximum swing. Includes 4010SE-159 and -425.

COMPLETE TRACK

4010SED-3038 Track ..... F,V[1],V[2]
- Length 31" (787mm). Includes 4010SED-206, and -3322.

☐ VOLTAGE [1] (DETECTOR): 24V AC/DC standard, 115V optional.
- 115V requires the use of a 4010SE-3210 transformer to reduce detector input voltage to 24V.

☐ VOLTAGE [2] (SOLENOID): 24V AC/DC standard, 115V optional.

4010SEC-3038 Track ..... F,V
- Length 22 3/4" (578mm).

☐ VOLTAGE (SOLENOID): 24V AC/DC standard, 115V optional.

4010SE-3038 Track ..... F,V
- Length 22 3/4" (578mm).

☐ VOLTAGE (SOLENOID): 24V AC/DC standard, 115V optional.

4010SEL-3038 Long Track ..... F,V
- Use with 4010SEL-3077T arm only! Length 25 3/4" (654mm).

☐ VOLTAGE (SOLENOID): 24V AC/DC standard, 115V optional.

INDIVIDUAL PARTS

***4010SE-31** **Cover Screw (2)** ..... **F**
***4010SE-159** **Arm Screw** ..... **F**

Unless otherwise noted all parts are used for SED, SEC, SE, and SEL series products.

4010SED, SEC, SE, and SEL-3166 solenoid assemblies are not available as a separate part.

Prices for part numbers shown in ITALICS may be found in the LCN PRICE LIST. Prices for part numbers shown in **BOLD**, with a " * " may be found in the **LCN PARTS PRICE LIST.**

LCN CLOSERS, 121 W.Railroad Ave.,Princeton, IL 61356
Phone (815) 875-3311 Fax (815) 875-3222

Form #716-0259
© 1992 Schlage

4010 SED/SEC/SE SERIES

SENTRONIC®
SINGLE POINT CLOSER/HOLDER

Specify finish (F) and voltage (V) where indicated.

INDIVIDUAL TRACK PARTS

4010SE-3210 Transformer

- Reduces line voltage from 115V AC to 24V AC.
- 24V required for SED detector input.
- Mounts in 4" (102mm) x 4" x 2 1/8" (54mm) handy box (by others).

Parts for *4010SED-3038* Track

*** 4010SE-59 Cover Plate ..... F**
*** 4010SE-60 Cover Plate Screw (3)..... F**
*** 4010SE-141-2 Plug (3) ..... F**
*** 4010SE-168 Yoke**
4010SED-206 Conduit Housing ..... F
4010SED-3322 Wiring Harness

- 17 wire, 5' (1524mm) length, green plug only.

4010SED-3938 SED Track only ..... F,V[1],V[2]

- Length 28 7/8" (733mm), green plug only.

☐ VOLTAGE [1] (DETECTOR): 24V AC/DC standard, 115V optional.

- 115V requires the use of a 4010SE-3210 transformer to reduce detector input voltage to 24V.

☐ VOLTAGE [2] (SOLENOID): 24V AC/DC standard, 115V optional.

Parts for *4010SEC-3038* Track

*** 4010SE-59 Cover Plate ..... F**
*** 4010SE-60 Cover Plate Screw (3)..... F**
*** 4010SE-73 End Cap (2) ..... F**
*** 4010SE-141-2 Plug (2) ..... F**
*** 4010SE-168 Yoke**

Parts for *4010SE-3038* Track

*** 4010SE-59 Cover Plate ..... F**
*** 4010SE-60 Cover Plate Screw (3)..... F**
*** 4010SE-73 End Cap (2) ..... F**
*** 4010SE-141 Plug (3) ..... F**
*** 4010SE-141-2 Plug (2) ..... F**
*** 4010SE-168 Yoke**

Parts for *4010SEL-3038* Long Track

*** 4010SE-59 Cover Plate ..... F**
*** 4010SE-60 Cover Plate Screw (3)..... F**
*** 4010SE-73 End Cap (2) ..... F**
*** 4010SE-141 Plug (3) ..... F**
*** 4010SE-141-2 Plug (2) ..... F**
*** 4010SE-168 Yoke**

Unless otherwise noted all parts are used for SED, SEC, SE, and SEL series products.

4010SED, SEC, SE or SEL-3166 solenoid assemblies are not available as a separate part.

Prices for part numbers shown in ITALICS may be found in the LCN PRICE LIST. Prices for part numbers shown in **BOLD**, with a " * " may be found in the **LCN PARTS PRICE LIST.**

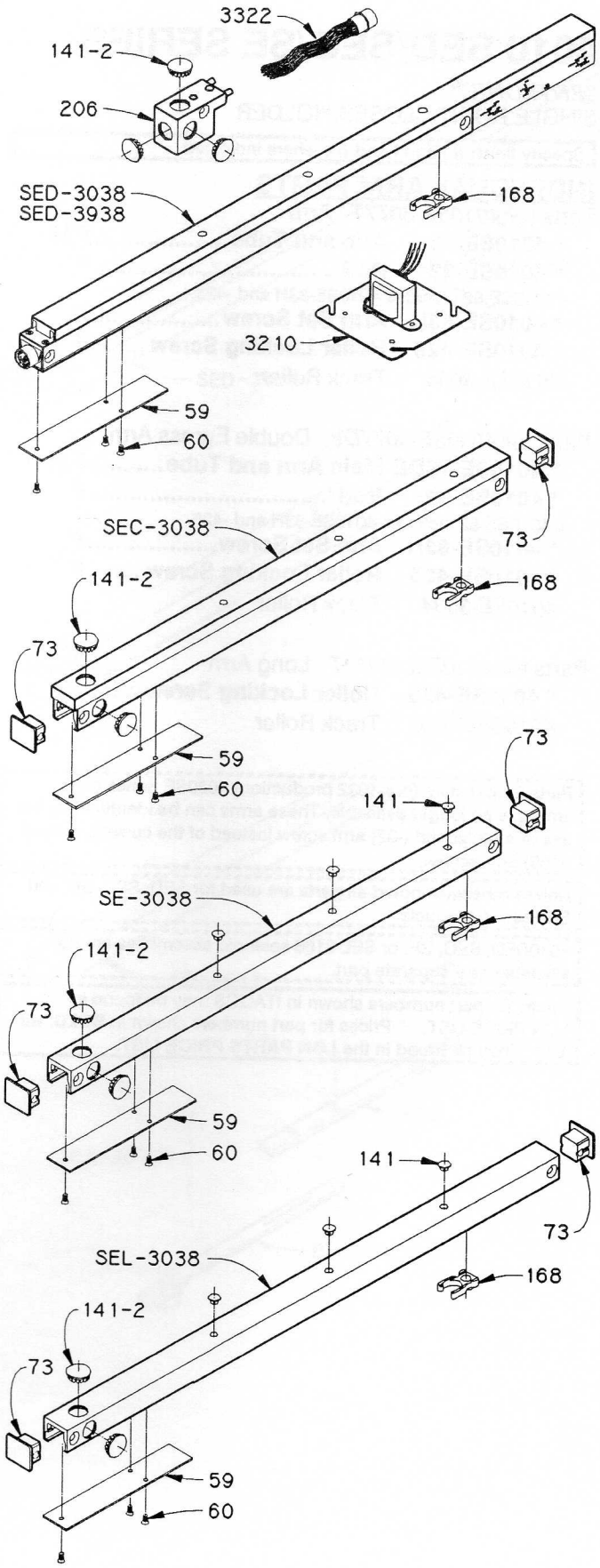

© 1992 Schlage Lock Co.
LCN CLOSERS, 121 W.Railroad Ave.,Princeton, IL 61356
Phone (815) 875-3311 Fax (815) 875-3222

4010 SED/SEC/SE SERIES

SENTRONIC®
SINGLE POINT CLOSER/HOLDER

Specify finish (F) and hand (H) where indicated.

INDIVIDUAL ARM PARTS

Parts for *4010SE-3077T* Arm

- *** 4010SE-78 Arm and Tube ..... F,H**
- *** 4010SE-82 Rod ..... F**
  - ●4010SE-82 includes 4010SE-83H and -425.
- *** 4010SE-83H Arm Set Screw ..... F**
- *** 4010SE-425 Roller Locking Screw ..... F**
- *4010SE-3034* Track Roller

Parts for *4010SE-3077DE* Double Egress Arm

- *** 4010SE-78DE Main Arm and Tube ..... F,H**
- *** 4010SE-82 Rod ..... F**
  - ●4010SE-82 includes 4010SE-83H and -425.
- *** 4010SE-83H Arm Set Screw ..... F**
- *** 4010SE-425 Roller Locking Screw ..... F**
- *4010SE-3034* Track Roller

Parts for *4010SEL-3077T* Long Arm

- *** 4010SE-425 Roller Locking Screw ..... F**
- *4010SE-3034* Track Roller

Parts for old style (pre-1982 production) 4030SE Series closer arms are no longer available. These arms can be identified by the use of a horizontal (-32) arm screw instead of the current, vertical (-159) arm screw.

Unless otherwise noted all parts are used for SED, SEC, SE, and SEL series products.

4010SED, SEC, SE, or SEL-3166 solenoid assemblies are not available as a separate part.

Prices for part numbers shown in ITALICS may be found in the LCN PRICE LIST. Prices for part numbers shown in **BOLD**, with a " * " may be found in the **LCN PARTS PRICE LIST.**

ARM 4010SE-3077T

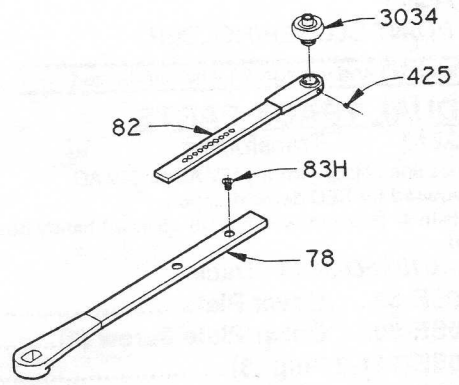

DOUBLE EGRESS ARM 4010SE-3077DE

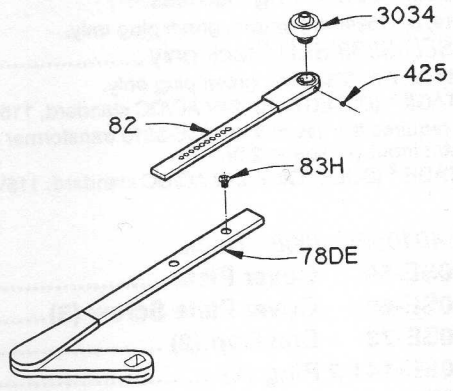

LONG ARM 4010SEL-3077T

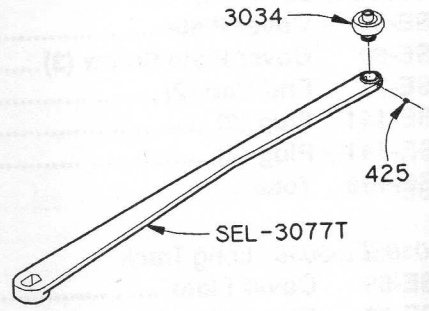

LCN CLOSERS, 121 W.Railroad Ave.,Princeton, IL 61356
Phone (815) 875-3311 Fax (815) 875-3222

Form #716-
© 1992 Schlage

4010 SEDS/SECS/SES SERIES

SENTRONIC®
SINGLE POINT HOLDER
PULL SIDE MOUNTED

Specify finish (F), hand (H), and voltage (V) where indicated.

COMPLETE ARM

4010SES-3077T Arm ..... F,H
- 110° maximum swing. Includes 4010SE-425.

COMPLETE TRACK

SEDS, SECS, and SES use 4110SED series tracks. Refer to page 49 for individual track parts.

4110SED-3038 Track ..... F,V[1],V[2]
- Length 31" (787mm). Includes 4110SED-206, and -3322.
- ☐ VOLTAGE [1] (DETECTOR): 24V AC/DC standard, 115V optional.
- 115V requires the use of a 4110SED-3210 transformer to reduce detector input voltage to 24V.
- ☐ VOLTAGE [2] (SOLENOID): 24V AC/DC standard, 115V optional.

4110SEC-3038 Track ..... F,V
- Length 22 3/4" (578mm).
- ☐ VOLTAGE (SOLENOID): 24V AC/DC standard, 115V optional.

4110SE-3038 Track ..... F,V
- Length 22 3/4" (578mm).
- ☐ VOLTAGE (SOLENOID): 24V AC/DC standard, 115V optional.

INDIVIDUAL PARTS

4110SED-3210 Transformer
- Reduces line voltage from 115V AC to 24V AC.
- 24V required for SED detector input.
- Mounts in 4" (102mm) x 4" x 2 1/8" (54mm) handy box (by others).

Parts for *4010SES-3077T* Arm

- *** 4010SES-78 Arm and Tube (W/–425) ..... F,H**
- *** 4010SES-82 Rod (W/–83) ..... F**
- *** 4010SES-83H Arm Set Screw ..... F**
- *** 4010SE-425 Roller Locking Screw ..... F**
- *4010SE-3034* Track Roller

Unless otherwise noted all parts are used for SEDS, SECS, and SES series products.

4110SED, SEC, or SE-3166 solenoid assemblies are not available as a separate part.

Prices for part numbers shown in ITALICS may be found in the LCN PRICE LIST. Prices for part numbers shown in **BOLD**, with a " * " may be found in the **LCN PARTS PRICE LIST.**

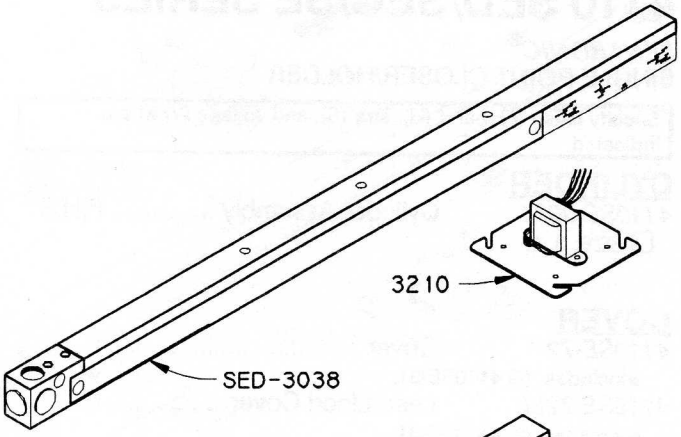

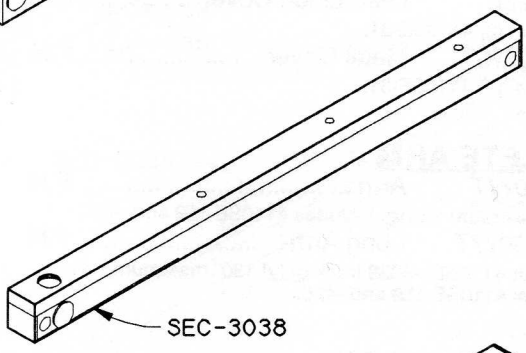

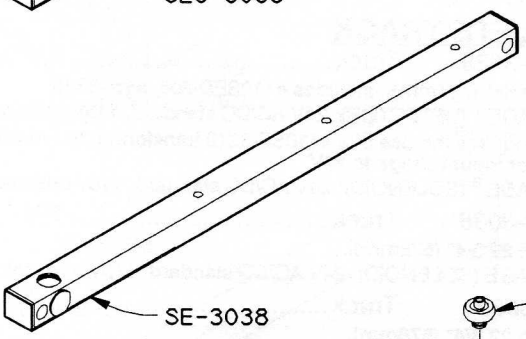

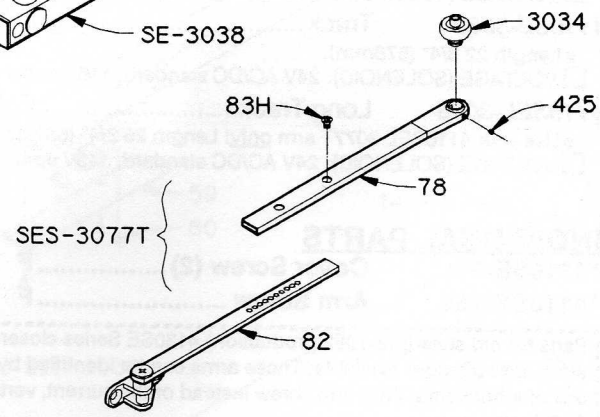

© 1992 Schlage Lock Co.
LCN CLOSERS, 121 W.Railroad Ave.,Princeton, IL 61356
Phone (815) 875-3311 Fax (815) 875-3222

4110 SED/SEC/SE SERIES

SENTRONIC®
SINGLE POINT CLOSER/HOLDER

Specify finish (F), hand (H), size (S), and voltage (V) where indicated.

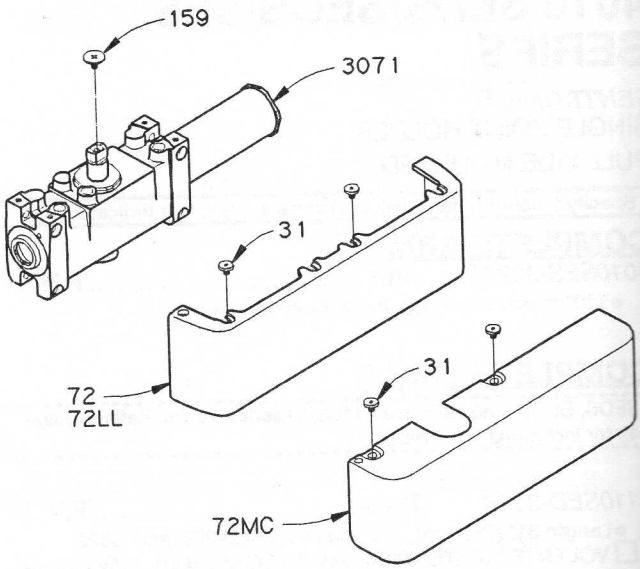

CYLINDER

4110SE-3071 Cylinder Assembly ..... F,H,S
☐ SIZE: 3, 4.

COVER

4110SE-72 Cover ..... F
- Includes (2) 4110SE-31.

4110SE-72LL Lead Lined Cover ..... F
- Includes (2) 4110SE-31.

4110SE-72MC Metal Cover ..... F,H
- Includes (2) 4110SE-31.

COMPLETE ARM

4110SE-3077T Arm ..... F,H
- 110° maximum swing. Includes 4110SE-159 and -425.

4110SEL-3077T Long Arm ..... F,H
- Use with 4110SEL-3038 track only! 130° maximum swing. Includes 4110SE-159 and -425.

COMPLETE TRACK

4110SED-3038 Track ..... F,V[1],V[2]
- Length 31" (787mm). Includes 4110SED-206, and -3322.

☐ VOLTAGE [1] (DETECTOR): 24V AC/DC standard, 115V optional.
- 115V requires the use of a 4110SE-3210 transformer to reduce detector input voltage to 24V.

☐ VOLTAGE [2] (SOLENOID): 24V AC/DC standard, 115V optional.

4110SEC-3038 Track ..... F,V
- Length 22 3/4" (578mm).

☐ VOLTAGE (SOLENOID): 24V AC/DC standard, 115V optional.

4110SE-3038 Track ..... F,V
- Length 22 3/4" (578mm).

☐ VOLTAGE (SOLENOID): 24V AC/DC standard, 115V optional.

4110SEL-3038 Long Track ..... F,V
- Use with 4110SEL-3077T arm only! Length 25 3/4" (654mm).

☐ VOLTAGE (SOLENOID): 24V AC/DC standard, 115V optional.

INDIVIDUAL PARTS

***4110SE-31 Cover Screw (2) ..... F**
***4110SE-159 Arm Screw ..... F**

Parts for old style (pre-1982 production) 4130SE Series closer arms are no longer available. These arms can be identified by the use of a horizontal (-32) arm screw instead of the current, vertical (-159) arm screw.

Unless otherwise noted all parts are used for SED, SEC, SE, and SEL series products.

4110SED, SEC, SE or SEL-3166 solenoid assemblies are not available as a separate part.

Prices for part numbers shown in ITALICS may be found in the LCN PRICE LIST. Prices for part numbers shown in **BOLD**, with a " * " may be found in the **LCN PARTS PRICE LIST.**

LCN CLOSERS, 121 W.Railroad Ave.,Princeton, IL 61356
Phone (815) 875-3311 Fax (815) 875-3222
Form #716-0292-
© 1992 Schlage Lock

4110 SED/SEC/SE SERIES

SENTRONIC®
SINGLE POINT CLOSER/HOLDER

Specify finish (F) and voltage (V) where indicated.

INDIVIDUAL TRACK PARTS

4110SE-3210 Transformer
- Reduces line voltage from 115V AC to 24V AC.
- 24V required for SED detector input.
- Mounts in 4" (102mm) x 4" x 2 1/8" (54mm) handy box (by others).

Parts for *4110SED-3038* Track
- *** 4110SE-59 Cover Plate ..... F**
- *** 4110SE-60 Cover Plate Screw (3)..... F**
- *** 4110SE-141-1 Plug (6) ..... F**
- *** 4110SE-141-2 Plug (3) ..... F**
- *** 4110SE-168 Yoke**

4110SED-206 Conduit Housing ..... F

4110SED-3322 Wiring Harness
- 17 wire, 5' (1524mm) length, green plug only.

4110SED-3938 SED Track only ..... F,V[1],V[2]
- Length 28 7/8" (733mm), green plug only.

☐ VOLTAGE [1] (DETECTOR): 24V AC/DC standard, 115V optional.
- 115V requires the use of a 4110SE-3210 transformer to reduce detector input voltage to 24V.

☐ VOLTAGE [2] (SOLENOID): 24V AC/DC standard, 115V optional.

Parts for *4110SEC-3038* Track
- *** 4110SE-59 Cover Plate ..... F**
- *** 4110SE-60 Cover Plate Screw (3)..... F**
- *** 4110SE-73 End Cap (2) ..... F**
- *** 4110SE-141-1 Plug (4) ..... F**
- *** 4110SE-141-2 Plug (2) ..... F**
- *** 4110SE-168 Yoke**

Parts for *4110SE-3038* Track
- *** 4110SE-59 Cover Plate ..... F**
- *** 4110SE-60 Cover Plate Screw (3)..... F**
- *** 4110SE-73 End Cap (2) ..... F**
- *** 4110SE-141-1 Plug (4) ..... F**
- *** 4110SE-141-2 Plug (2) ..... F**
- *** 4110SE-168 Yoke**

Parts for *4110SEL-3038* Track
- *** 4110SE-59 Cover Plate ..... F**
- *** 4110SE-60 Cover Plate Screw (3)..... F**
- *** 4110SE-73 End Cap (2) ..... F**
- *** 4110SE-141-1 Plug (4) ..... F**
- *** 4110SE-141-2 Plug (2) ..... F**
- *** 4110SE-168 Yoke**

Unless otherwise noted all parts are used for SE, SEC, SED, and SEL series products.

4110SED, SEC, SE or SEL-3166 solenoid assemblies are not available as a separate part.

Prices for part numbers shown in ITALICS may be found in the LCN PRICE LIST. Prices for part numbers shown in **BOLD**, with a " * " may be found in the **LCN PARTS PRICE LIST.**

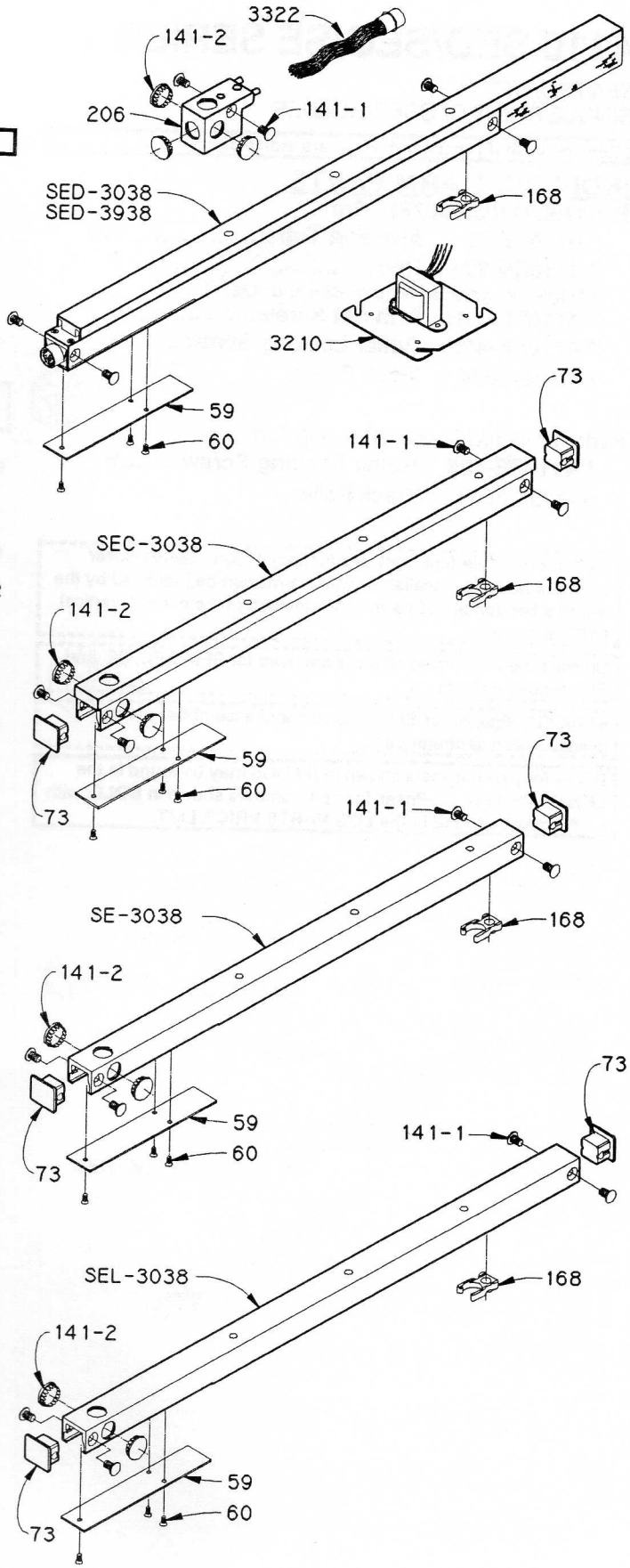

© 1992 Schlage Lock Co.
LCN CLOSERS, 121 W.Railroad Ave.,Princeton, IL 61356
Phone (815) 875-3311 Fax (815) 875-3222

4110 SED/SEC/SE SERIES

SENTRONIC®
SINGLE POINT CLOSER/HOLDER

Specify finish (F) and hand (H) where indicated.

INDIVIDUAL ARM PARTS

Parts for *4110SE-3077T* Arm

- *** 4110SE-78** **Arm and Tube** ..... **F,H**
- *** 4110SE-82** **Rod** ..... **F**
  - •4110SE-82 includes 4010SE-83H and -425.
- *** 4110SE-83H** **Arm Set Screw** ..... **F**
- *** 4110SE-425** **Roller Locking Screw** ..... **F**
- *4110SE-3034* Track Roller

Parts for *4110SEL-3077T* Long Arm

- *** 4110SE-425** **Roller Locking Screw** ..... **F**
- *4110SE-3034* Track Roller

Parts for old style (pre-1982 production) 4130SE Series closer arms are no longer available. These arms can be identified by the use of a horizontal (-32) arm screw instead of the current, vertical (-159) arm screw.

Unless otherwise noted all parts are used for SED, SEC, SE, and SEL series products.

4110SED, SEC, SE or SEL-3166 solenoid assemblies are not available as a separate part.

Prices for part numbers shown in ITALICS may be found in the LCN PRICE LIST. Prices for part numbers shown in **BOLD**, with a " * " may be found in the **LCN PARTS PRICE LIST.**

ARM

4110SE-3077T

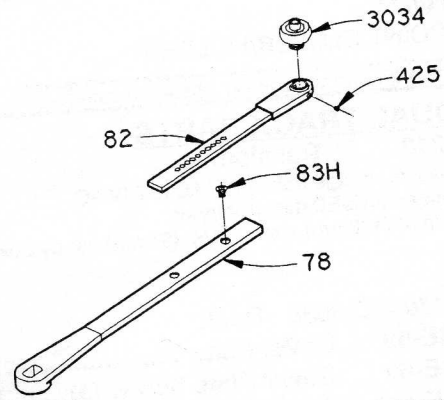

LONG ARM

4110SEL-3077T

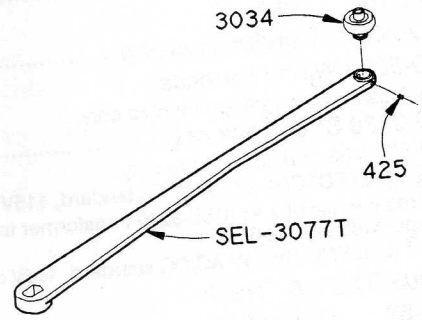

LCN CLOSERS, 121 W.Railroad Ave.,Princeton, IL 61356
Phone (815) 875-3311 Fax (815) 875-3222

Form #716-
© 1992 Schlage

4110 SEDH/SECH/SEH SERIES

SENTRONIC®
SINGLE POINT HOLDER
PUSH SIDE MOUNTED

Specify finish (F), hand (H), and voltage (V) where indicated.

COMPLETE ARM

4110SES-3077T Arm ..... F,H
- 110° maximum swing. Includes 4110SE-425.

COMPLETE TRACK

4110SEDH, SECH, and SEH use 4010SED series tracks. Refer to page 48 for individual track parts.

4010SED-3038 Track ..... F,V[1],V[2]
- Length 31" (787mm). Includes 4010SED-206, and -3322.
- ☐ VOLTAGE [1] (DETECTOR): 24V AC/DC standard, 115V optional.
- 115V requires the use of a 4010SED-3210 transformer to reduce detector input voltage to 24V.
- ☐ VOLTAGE [2] (SOLENOID): 24V AC/DC standard, 115V optional.

4010SEC-3038 Track ..... F,V
- Length 22 3/4" (578mm).
- ☐ VOLTAGE (SOLENOID): 24V AC/DC standard, 115V optional.

4010SE-3038 Track ..... F,V
- Length 22 3/4" (578mm).
- ☐ VOLTAGE (SOLENOID): 24V AC/DC standard, 115V optional.

INDIVIDUAL PARTS

4010SED-3210 Transformer
- Reduces line voltage from 115V AC to 24V AC.
- 24V required for SED detector input.
- Mounts in 4" (102mm) x 4" x 2 1/8" (54mm) handy box (by others).

Parts for *4110SEH-3077T* Arm
- *** 4110SEH-78 Arm and Tube** (W/–425) ..... **F,H**
- *** 4110SEH-82 Rod** (w/–83) ..... **F**
- *** 4110SEH-83H Arm Set Screw** ..... **F**
- *** 4110SE-425 Roller Locking Screw** ..... **F**
- *4110SE-3034* Track Roller

Unless otherwise noted all parts are used for SEDH, SECH and SEH series products.

4010SED, SEC, or SE-3166 solenoid assemblies are not available as a separate part.

Prices for part numbers shown in ITALICS may be found in the LCN PRICE LIST. Prices for part numbers shown in **BOLD**, with a " * " may be found in the **LCN PARTS PRICE LIST.**

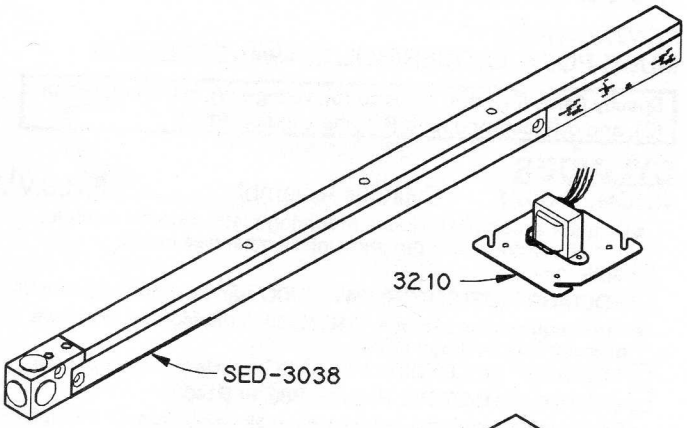

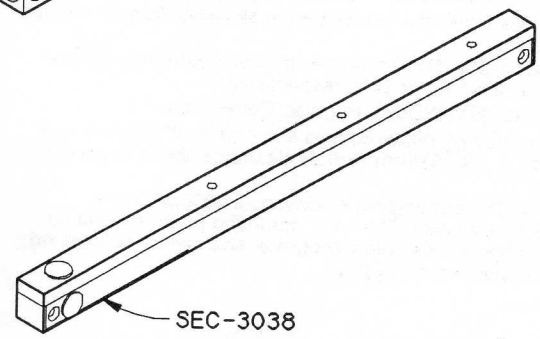

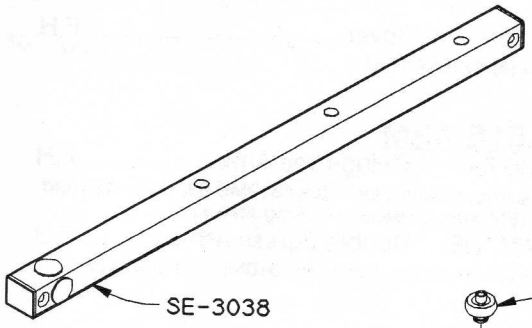

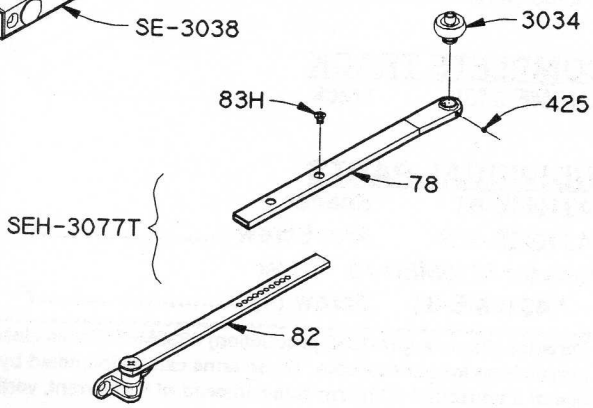

© 1992 Schlage Lock Co.
LCN CLOSERS, 121 W.Railroad Ave.,Princeton, IL 61356
Phone (815) 875-3311 Fax (815) 875-3222

4310 MED SERIES

SENTRONIC®
MULTI-POINT CLOSER/HOLDER with DETECTOR

Specify finish (F), hand (H), size (S), voltage (V), cylinder function (C), and cylinder mounting (M) where indicated.

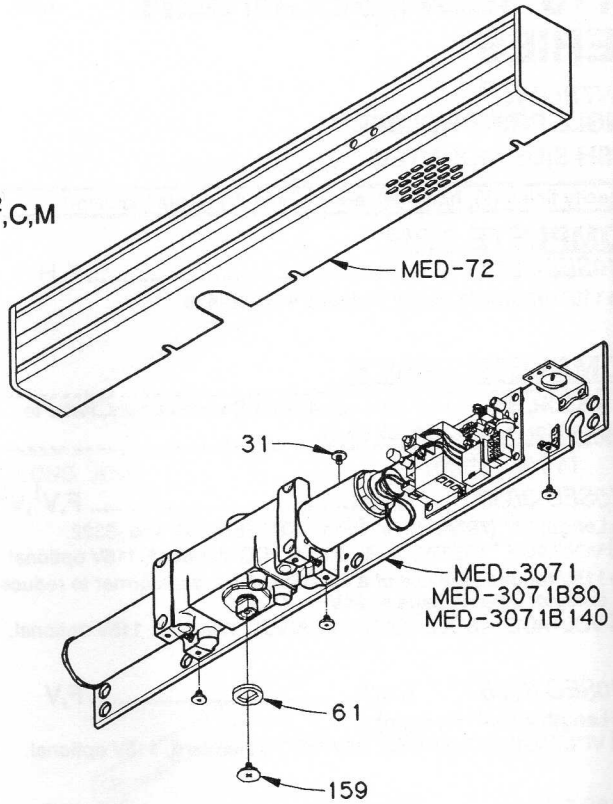

CYLINDER

4310MED-3071 Cylinder Assembly ..... F,H,S,V[1],V[2],C,M

- Cylinder assembly includes mounting plate, detector module, and all electrical components unless otherwise noted.

☐ SIZE: 3 or 4.

☐ VOLTAGE [1] (DETECTOR): 24V AC/DC standard, 115V optional.

- 115V requires the use of a 4310ME-3210 transformer to reduce detector input voltage to 24V.

☐ VOLTAGE [2] (SOLENOID): 24V AC/DC standard, 115V optional.

☐ CYLINDER FUNCTION: Regular, B80, or B140.

- Regular -3071 cylinder holds-open at all points from 0° through 160° opening.
- -3071B80 or -3071B140 cylinders bypass hold-open function from 0° to either 80° or 140°, respectively.

☐ MOUNTING (CYLINDER): Regular, Conversion.

- Regular mounting plate requires a minimum 2" (51mm) face frame and 3 7/8" (98mm) vertical clearance above lower edge of frame.
- Special "-1C" mounting plate converts a 4330MED to a 4310MED installation. The "-1C" mounting plate is available under the Special Template program, and can be substituted for the regular mounting plate.

COVER

4310MED-72 Cover ..... F,H

- Includes (4) 4310MED-31.

COMPLETE ARM

4310ME-3077SF Swing-Free Arm..... F,H

- 180° maximum swing. Includes 4310ME-83, -159, -425 and 10-24 x 3/8" swing-free arm locking screw.

4310ME-3077DE Double Egress Arm ..... F,H

- 100° maximum swing. Includes 4310ME-159 and -425.

COMPLETE TRACK

4310ME-3038 Track..... F

INDIVIDUAL PARTS

***4310ME-61 Spacer**

***4310ME-159 Arm Screw ..... F**

Parts for *4310MED-72* Cover

*** 4310ME-31 Screw (4) ..... F**

Parts for old style (pre-1982 production) 4330MED Series closer arms are no longer available. These arms can be identified by the use of a horizontal (-32) arm screw instead of the current, vertical (-159) arm screw.

Unless otherwise noted all parts are used for MED, MEC, and ME series.

4310MED-3166 solenoid assembly is not available as a separate part.

Prices for part numbers shown in ITALICS may be found in the LCN PRICE LIST. Prices for part numbers shown in **BOLD**, with a " * " may be found in the **LCN PARTS PRICE LIST.**

LCN CLOSERS, 121 W.Railroad Ave.,Princeton, IL 61356
Phone (815) 875-3311 Fax (815) 875-3222

Form #716-0292-10M

© 1992 Schlage Lock Co

4310 MED SERIES

SENTRONIC®
MULTI-POINT CLOSER/HOLDER with DETECTOR

Specify finish (F), hand (H), size (S), voltage (V), cylinder function (C), and cylinder mounting (M) where indicated.

INDIVIDUAL PARTS

Parts for *4310MED-3071* MED Cylinder Assembly

- Neither regular nor -1C mounting plate is available as a separate part.

*** 4310MED-210 Transformer**

- Reduces line voltage from 115V AC to 24V AC.
- 24V required for MED detector input.
- Mounts on cylinder mounting plate.

4310MED-3352 Detector Module V

- Requires 24V input.

4310MED-3360 MED Wiring Harness

- 17 wire, 5' (1524mm) length.

*** 4310MED-3362 Input Jumper**

- Required for 24V input installations only. Not used when 4310ME-210 is installed.

4310ME-3971 Cylinder only ..... F,H,S,V,C

- -3971 cylinder only includes solenoid but does not include mounting plate or other electrical components.

☐ SIZE: 3 or 4.
☐ VOLTAGE (SOLENOID): 24V AC/DC standard, 115V optional.
☐ CYLINDER FUNCTION: Regular, B80, or B140.

Parts for *4310ME-3038* Track

*** 4310ME-73 End Cap (2) ..... F**
*** 4310ME-141 Plug (4) ..... F**
*** 4310ME-3938 Regular Track only..... F**

Parts for *4310ME-3077SF* Swing-Free Arm

*** 4310ME-83 Arm Set Screw..... F**
*** 4310ME-425 Roller Locking Screw ..... F**
4310ME-3034 Track Roller

Parts for *4310ME-3077DE* Double Egress Arm

*** 4310ME-425 Roller Locking Screw ..... F**
4310ME-3034 Track Roller

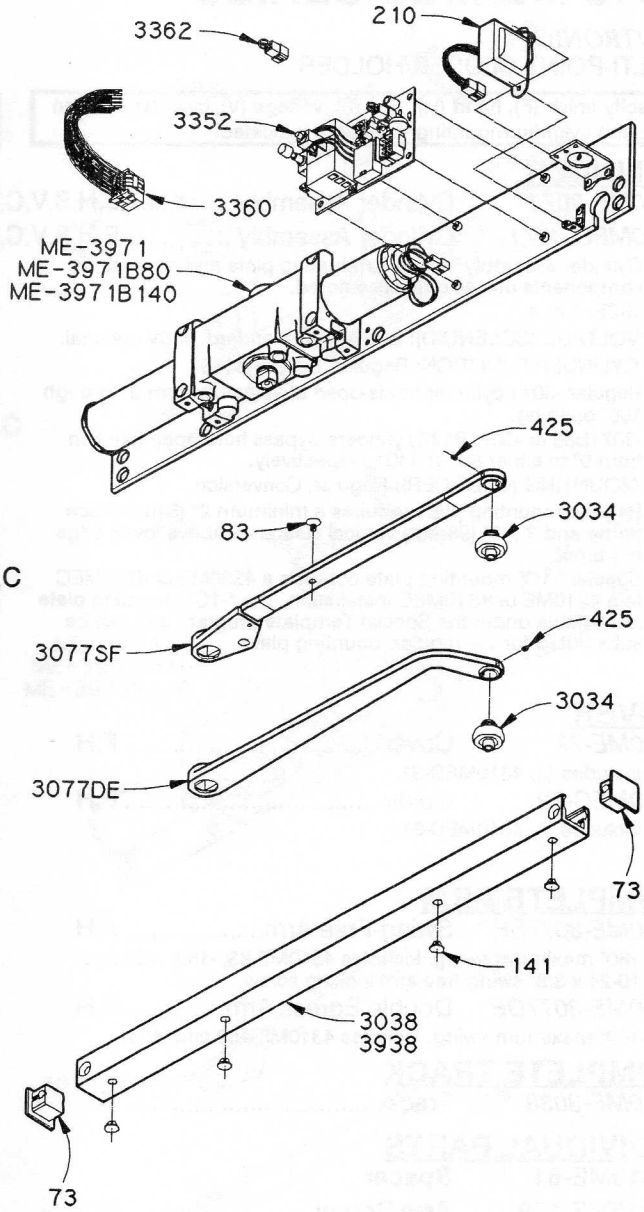

Parts for old style (pre-1982 production) 4330MED Series closer arms are no longer available. These arms can be identified by the use of a horizontal (-32) arm screw instead of the current, vertical (-159) arm screw.

Unless otherwise noted all parts are used for MED, MEC, and ME series.

4310MED-3166 solenoid assembly is not available as a separate part.

Prices for part numbers shown in ITALICS may be found in the LCN PRICE LIST. Prices for part numbers shown in **BOLD**, with a " * " may be found in the **LCN PARTS PRICE LIST.**

© 1992 Schlage Lock Co.
LCN CLOSERS, 121 W.Railroad Ave.,Princeton, IL 61356
Phone (815) 875-3311 Fax (815) 875-3222

4310 ME/MEC SERIES

SENTRONIC®
MULTI-POINT CLOSER/HOLDER

Specify finish (F), hand (H), size (S), voltage (V), cylinder function (C), and cylinder mounting (M) where indicated.

CYLINDER

4310ME-3071 Cylinder Assembly ..... F,H,S,V,C,M
4310MEC-3071 Cylinder Assembly ..... F,H,S,V,C,M

- Cylinder assembly includes mounting plate and all electrical components unless otherwise noted.

☐ SIZE: 3 or 4.
☐ VOLTAGE (SOLENOID): 24V AC/DC standard, 115V optional.
☐ CYLINDER FUNCTION: Regular, B80, or B140.

- Regular -3071 cylinder holds-open at all points from 0° through 160° opening.
- -3071B80 or -3071B140 cylinders bypass hold-open function from 0° to either 80° or 140°, respectively.

☐ MOUNTING (CYLINDER): Regular, Conversion.

- Regular mounting plate requires a minimum 2" (51mm) face frame and 3 7/8" (98mm) vertical clearance above lower edge of frame.
- Special "-1C" mounting plate converts a 4330ME or 4330MEC to a 4310ME or 4310MEC installation. The "-1C" mounting plate is available under the Special Template program and can be substituted for the regular mounting plate.

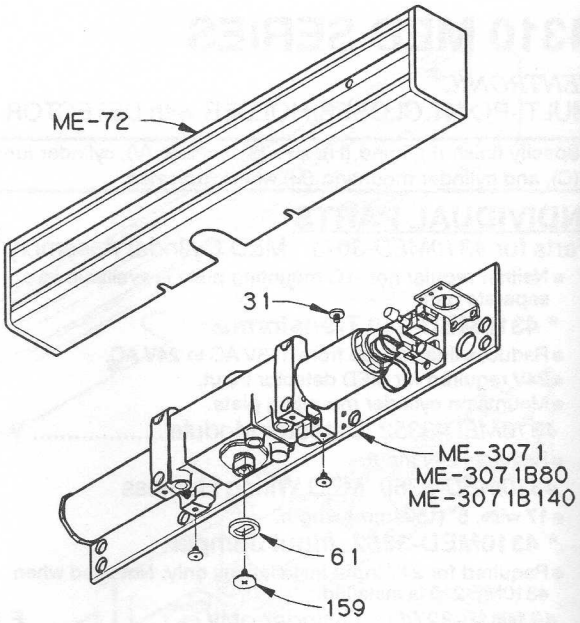

COVER

4310ME-72 Cover ..... F,H
- Includes (3) 4310MED-31.

4310MEC-72 Cover ..... F,H
- Includes (4) 4310MED-31.

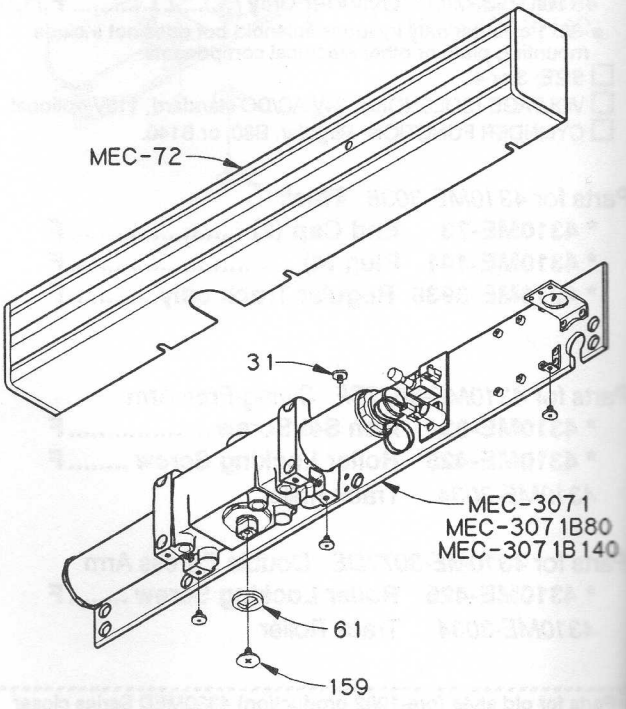

COMPLETE ARM

4310ME-3077SF Swing-Free Arm..... F,H
- 180° maximum swing. Includes 4310ME-83, -159, -425 and 10-24 x 3/8" swing-free arm locking screw.

4310ME-3077DE Double Egress Arm ..... F,H
- 100° maximum swing. Includes 4310ME-159 and -425.

COMPLETE TRACK

4310ME-3038 Track..... F

INDIVIDUAL PARTS

***4310ME-61 Spacer**
***4310ME-159 Arm Screw ..... F**

Parts for *4310ME-72* Cover

Parts for *4310MEC-72* Cover

*** 4310ME-31 Screw..... F**
- 3 required for ME, 4 required for MEC.

Parts for old style (pre-1982 production) 4330ME or 4330MEC Series closer arms are no longer available. These arms can be identified by the use of a horizontal (-32) arm screw instead of the current, vertical (-159) arm screw.

Unless otherwise noted all parts are used for MED, MEC, and ME series.

4310ME-3166 and 4310MEC-3166 solenoid assemblies are not available as a separate part.

Prices for part numbers shown in ITALICS may be found in the LCN PRICE LIST. Prices for part numbers shown in **BOLD**, with a " * " may be found in the **LCN PARTS PRICE LIST.**

LCN CLOSERS, 121 W.Railroad Ave.,Princeton, IL 61356
Phone (815) 875-3311 Fax (815) 875-3222
Form #716-0292-10M
© 1992 Schlage Lock Co.

4310 ME/MEC SERIES

SENTRONIC®
MULTI-POINT CLOSER/HOLDER

Specify finish (F), hand (H), size (S), voltage (V), cylinder function (C), and cylinder mounting (M) where indicated.

INDIVIDUAL PARTS

Parts for *4310ME-3071* ME Cylinder Assembly
Parts for *4310MEC-3071* MEC Cylinder Assembly
- Neither regular nor -1C mounting plate is available as a separate part.

4310ME-3351 On/Off Switch Assembly V
☐ 24V AC/DC standard, 115V optional.

*** 4310ME-3354 ME Wiring Harness**
- 3 wire, 6" (152mm) length.

4310ME-3971 Cylinder only ..... F,H,S,V,C
- -3971 cylinder only includes solenoid but does not include mounting plate or other electrical components.

☐ SIZE: 3 or 4.
☐ VOLTAGE (SOLENOID): 24V AC/DC standard, 115V optional.
☐ CYLINDER FUNCTION : Regular, B80, or B140.

Parts for *4310ME-3038* Track
*** 4310ME-73 End Cap (2) ..... F**
*** 4310ME-141 Plug (4) ..... F**
*** 4310ME-3938 Regular Track only..... F**

Parts for *4310ME-3077SF* Swing-Free Arm
*** 4310ME-83 Arm Set Screw..... F**
*** 4310ME-425 Roller Locking Screw ..... F**
4310ME-3034 Track Roller

Parts for *4310ME-3077DE* Double Egress Arm
*** 4310ME-425 Roller Locking Screw ..... F**
4310ME-3034 Track Roller

Parts for old style (pre-1982 production) 4330ME or 4330MEC Series closer arms are no longer available. These arms can be identified by the use of a horizontal (-32) arm screw instead of the current, vertical (-159) arm screw.

Unless otherwise noted all parts are used for MED, MEC, and ME series.

4310ME-3166 and 4310MEC-3166 solenoid assemblies are not available as a separate part.

Prices for part numbers shown in ITALICS may be found in the LCN PRICE LIST. Prices for part numbers shown in **BOLD**, with a " * " may be found in the **LCN PARTS PRICE LIST.**

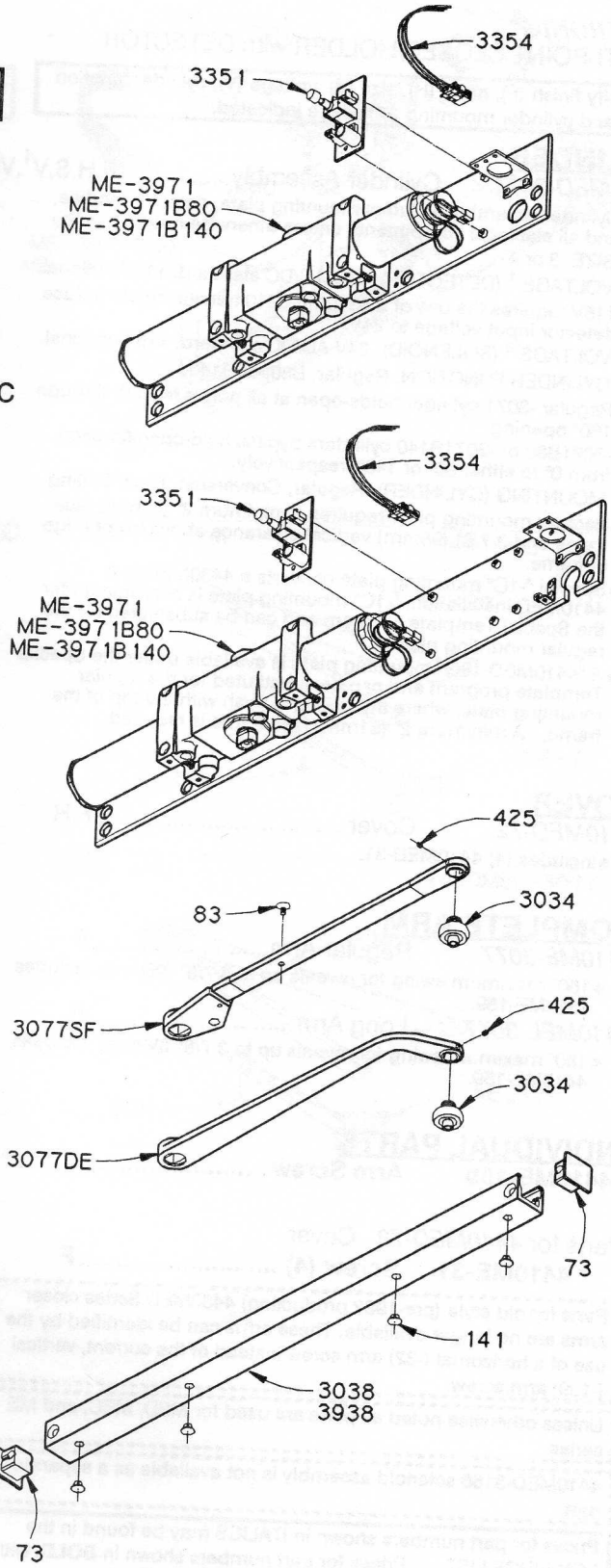

© 1992 Schlage Lock Co.
LCN CLOSERS, 121 W.Railroad Ave.,Princeton, IL 61356
Phone (815) 875-3311 Fax (815) 875-3222

4410 MED SERIES

SENTRONIC®
MULTI-POINT CLOSER/HOLDER with DETECTOR

Specify finish (F), hand (H), size (S), voltage (V), cylinder function (C), and cylinder mounting (M) where indicated.

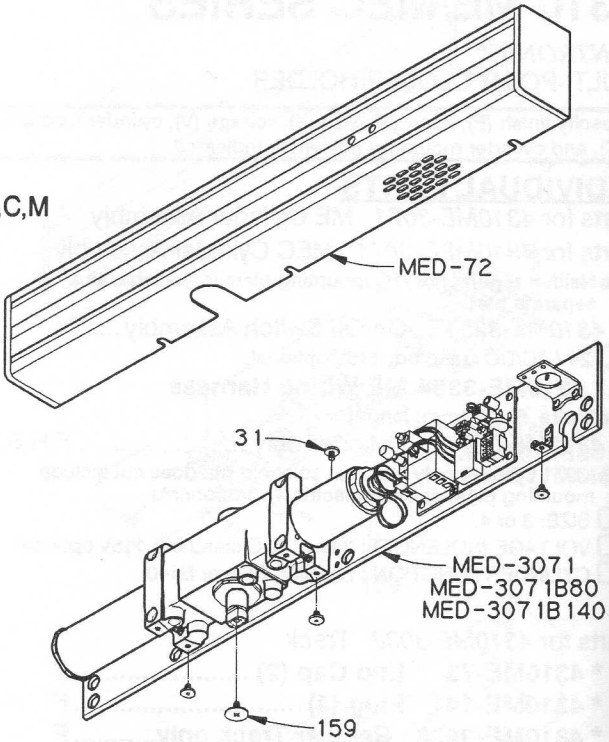

CYLINDER

4410MED-3071 Cylinder Assembly ..... F,H,S,V[1],V[2],C,M

- Cylinder assembly includes mounting plate, detector module, and all electrical components unless otherwise noted.

☐ SIZE: 3 or 4.

☐ VOLTAGE [1] (DETECTOR): 24V AC/DC standard, 115V optional.

- 115V requires the use of a 4310ME-3210 transformer to reduce detector input voltage to 24V.

☐ VOLTAGE [2] (SOLENOID): 24V AC/DC standard, 115V optional.

☐ CYLINDER FUNCTION: Regular, B80, or B140.

- Regular -3071 cylinder holds-open at all points from 0° through 160° opening.
- -3071B80 or -3071B140 cylinders bypass hold-open function from 0° to either 80° or 140°, respectively.

☐ MOUNTING (CYLINDER): Regular, Conversion, Flush Ceiling.

- Regular mounting plate requires a minimum 2" (51mm) face frame and 3 7/8" (98mm) vertical clearance above lower edge of frame.
- Special "-1C" mounting plate converts a 4430MED to a 4410MED installation. "-1C" mounting plate is available under the Special Template program and can be substituted for the regular mounting plate.
- A "4410MED-18G" mounting plate is available under the Special Template program and can be substituted for the regular mounting plate, where the ceiling is flush with the top of the frame, . A minimum 2" (51mm) face frame is required.

COVER

4410MED-72 Cover ..... F,H

- Includes (4) 4410MED-31.

COMPLETE ARM

4410ME-3077 Regular Arm..... F

- 160° maximum swing for reveals up to 3 7/8" (98mm). Includes 4410ME-159.

4410MEL-3077 Long Arm ..... F

- 180° maximum swing for reveals up to 3 7/8" (98mm). Includes 4410ME-159.

INDIVIDUAL PARTS

***4410ME-159 Arm Screw ..... F**

Parts for *4410MED-72* Cover

*** 4410ME-31 Screw (4) ..... F**

Parts for old style (pre-1982 production) 4430MED Series closer arms are no longer available. These arms can be identified by the use of a horizontal (-32) arm screw instead of the current, vertical (-159) arm screw.

Unless otherwise noted all parts are used for MED, MEC, and ME series.

4410MED-3166 solenoid assembly is not available as a separate part.

Prices for part numbers shown in ITALICS may be found in the LCN PRICE LIST. Prices for part numbers shown in **BOLD**, with a " * " may be found in the **LCN PARTS PRICE LIST.**

LCN CLOSERS, 121 W.Railroad Ave.,Princeton, IL 61356
Phone (815) 875-3311 Fax (815) 875-3222

Form #716-0292-10M

© 1992 Schlage Lock Co.

4410 MED SERIES

SENTRONIC®
MULTI-POINT CLOSER/HOLDER with DETECTOR

Specify finish (F), hand (H), size (S), voltage (V), cylinder function (C), and cylinder mounting (M) where indicated.

INDIVIDUAL PARTS

Parts for *4410MED-3071* MED Cylinder Assembly

- Neither regular, -1C, nor -18G mounting plate is available as a separate part.

*** 4410MED-210 Transformer**

- Reduces line voltage from 115V AC to 24V AC.
- 24V required for MED detector input.
- Mounts on cylinder mounting plate.

4410MED-3352 Detector Module V

- Requires 24V input.

4410MED-3360 MED Wiring Harness

- 17 wire, 5' (1524mm) length.

*** 4410MED-3362 Input Jumper**

- Required for 24V input installations only. Not used when 4410ME-210 is installed.

4410ME-3971 Cylinder only ..... F,H,S,V,C

- -3971 cylinder only includes solenoid but does not include mounting plate or other electrical components.

☐ SIZE: 3 or 4.
☐ VOLTAGE (SOLENOID): 24V AC/DC standard, 115V optional.
☐ CYLINDER FUNCTION: Regular, B80, or B140.

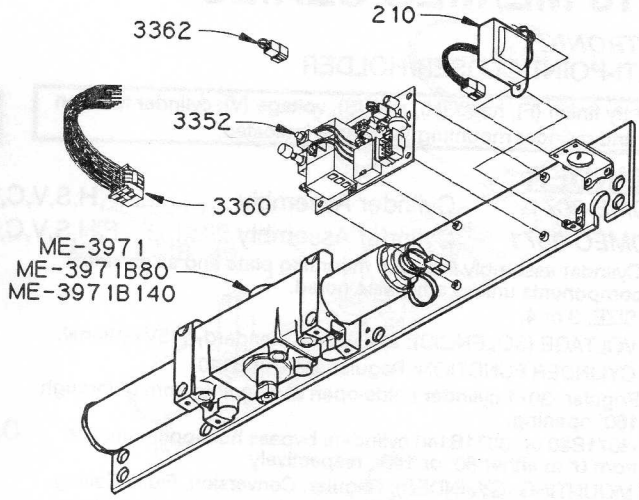

Parts for *4410ME-3077* Regular Arm

*** 4410ME-77 Main Arm & Forearm ..... F**

- 10 15/16" (278mm) main arm length.

4410ME-79 Rod & Shoe (w/-83H) ..... F

- 8 5/16" (211mm) rod length.

*** 4410ME-83H Arm Set Screw ..... F**

REGULAR ARM 4410ME-3077

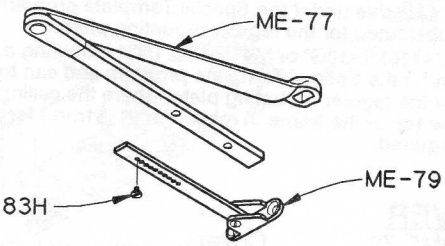

Parts for *4410MEL-3077* Long Arm

*** 4410MEL-77 Main Arm & Forearm ..... F**

- 12 15/16" (329mm) main arm length.

4410MEL-79 Rod & Shoe (w/-83H) ..... F

- 8 5/16" (211mm) rod length.

*** 4410ME-83H Arm Set Screw ..... F**

LONG ARM 4410MEL-3077

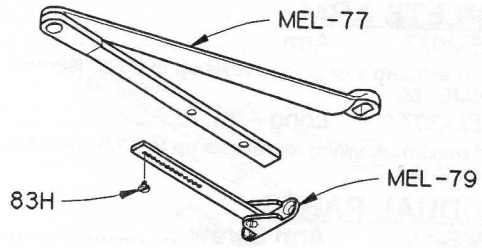

Parts for old style (pre-1982 production) 4430MED Series closer arms are no longer available. These arms can be identified by the use of a horizontal (-32) arm screw instead of the current, vertical (-159) arm screw.

Unless otherwise noted all parts are used for MED, MEC, and ME series.

4410MED-3166 solenoid assembly is not available as a separate part.

Prices for part numbers shown in ITALICS may be found in the LCN PRICE LIST. Prices for part numbers shown in **BOLD**, with a " * " may be found in the **LCN PARTS PRICE LIST.**

© 1992 Schlage Lock Co.
LCN CLOSERS, 121 W.Railroad Ave.,Princeton, IL 61356
Phone (815) 875-3311 Fax (815) 875-3222

4410 ME/MEC SERIES

SENTRONIC®
MULTI-POINT CLOSER/HOLDER

Specify finish (F), hand (H), size (S), voltage (V), cylinder function (C), and cylinder mounting (M) where indicated.

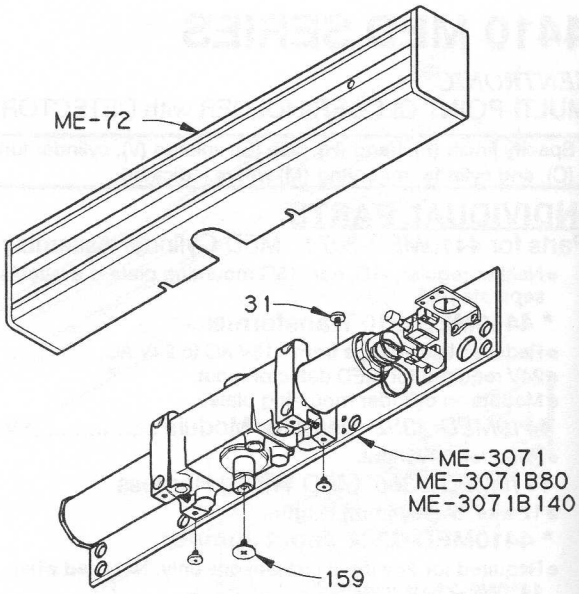

CYLINDER

4410ME-3071 Cylinder Assembly ..... F,H,S,V,C,M
4410MEC-3071 Cylinder Assembly ..... F,H,S,V,C,M

- Cylinder assembly includes mounting plate and all electrical components unless otherwise noted.

☐ SIZE: 3 or 4.
☐ VOLTAGE (SOLENOID): 24V AC/DC standard, 115V optional.
☐ CYLINDER FUNCTION: Regular, B80, or B140.

- Regular -3071 cylinder holds-open at all points from 0° through 160° opening.
- -3071B80 or -3071B140 cylinders bypass hold-open function from 0° to either 80° or 140°, respectively.

☐ MOUNTING (CYLINDER): Regular, Conversion, Flush Ceiling.

- Regular mounting plate requires a minimum 2" (51mm) face frame and 3 7/8" (98mm) vertical clearance above lower edge of frame.
- Special "-1C" mounting plate converts a 4430ME or 4430MEC to a 4410ME or 4410MEC installation. The "-1C" mounting plate is available under the Special Template program and can be substituted for the regular mounting plate.
- A "4410ME-18G" or "4410MEC-18G" mounting plate is available under the Special Template program and can be substituted for the regular mounting plate, where the ceiling is flush with the top of the frame. A minimum 2" (51mm) face frame is required.

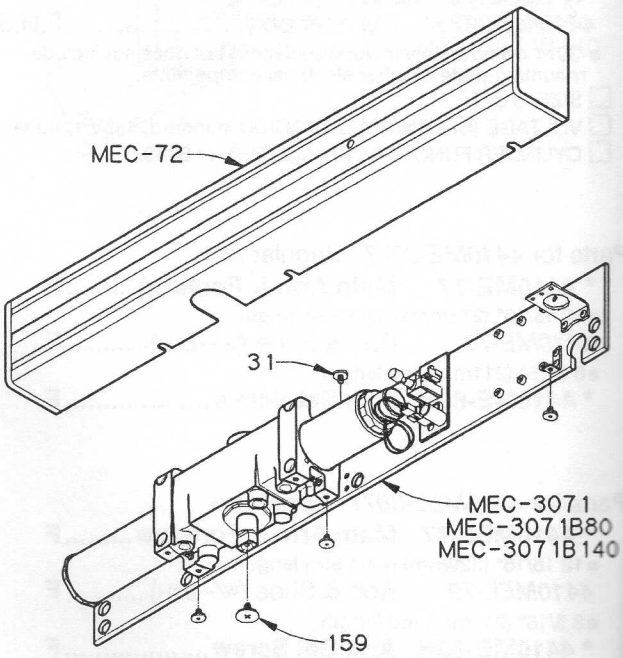

COVER

4410ME-72 Cover ..... F,H
- Includes (3) 4410ME-31.

4410MEC-72 Cover ..... F,H
- Includes (4) 4410ME-31.

COMPLETE ARM

4410ME-3077 Arm ..... F
- 160° maximum swing for reveals up to 3 7/8" (98mm). Includes 4410ME-159.

4410MEL-3077 Long Arm ..... F
- 180° maximum swing for reveals up to 3 7/8" (98mm). Includes 4410ME-159.

INDIVIDUAL PARTS

***4410ME-159 Arm Screw ..... F**

Parts for *4410ME-72* Cover

Parts for *4410MEC-72* Cover

*** 4410ME-31 Screw ..... F**
- 3 required for ME, 4 required for MEC.

Parts for old style (pre-1982 production) 4430ME(C) Series closer arms are no longer available. These arms can be identified by the use of a horizontal (-32) arm screw instead of the current, vertical (-159) arm screw.

Unless otherwise noted all parts are used for MED, MEC, and ME series.

4410ME-3166 and 4410MEC-3166 solenoid assemblies are not available as a separate part.

Prices for part numbers shown in ITALICS may be found in the LCN PRICE LIST. Prices for part numbers shown in **BOLD**, with a " * " may be found in the **LCN PARTS PRICE LIST.**

LCN CLOSERS, 121 W.Railroad Ave.,Princeton, IL 61356
Phone (815) 875-3311 Fax (815) 875-3222
Form #716-0292-10M
© 1992 Schlage Lock Co.

4410 ME/MEC SERIES

SENTRONIC®
MULTI-POINT CLOSER/HOLDER

Specify finish (F), hand (H), size (S), voltage (V), cylinder function (C), and cylinder mounting (M) where indicated.

INDIVIDUAL PARTS

Parts for *4410ME-3071* ME Cylinder Assembly
Parts for *4410MEC-3071* MEC Cylinder Assembly
- Neither regular, -1C, nor -18G mounting plate is available as a separate part.

4410ME-3351 On/Off Switch Assembly..... V
☐ 24V AC/DC standard, 115V optional.

*** 4410ME-3354 ME Wiring Harness**
- 3 wire, 6" (152mm) length.

4410ME-3971 Cylinder only ..... F,H,S,V,C
- -3971 cylinder only includes solenoid but does not include mounting plate or other electrical components.

☐ SIZE: 3 or 4.
☐ VOLTAGE (SOLENOID): 24V AC/DC standard, 115V optional.
☐ CYLINDER FUNCTION : Regular, B80, or B140.

Parts for *4410ME-3077* Arm
*** 4410ME-77 Main Arm & Forearm ..... F**
- 10 15/16" (278mm) main arm length.

4410ME-79 Rod & Shoe ..... F
- 8 5/16" (211mm) rod length. Includes -83H.

*** 4410ME-83H Arm Set Screw..... F**

Parts for *4410MEL-3077* Long Arm
*** 4410MEL-77 Main Arm & Forearm ..... F**
- 12 15/16" (329mm) main arm length.

4410MEL-79 Rod & Shoe ..... F
- 8 5/16" (211mm) rod length. Includes -83H.

*** 4410ME-83H Arm Set Screw..... F**

Parts for old style (pre-1982 production) 4430ME and 4430MEC Series closer arms are no longer available. These arms can be identified by the use of a horizontal (-32) arm screw instead of the current, vertical (-159) arm screw.

Unless otherwise noted all parts are used for MED, MEC, and ME series.

4410ME-3166 and 4410MEC-3166 solenoid assemblies are not available as a separate part.

Prices for part numbers shown in ITALICS may be found in the LCN PRICE LIST. Prices for part numbers shown in **BOLD**, with a " * " may be found in the **LCN PARTS PRICE LIST.**

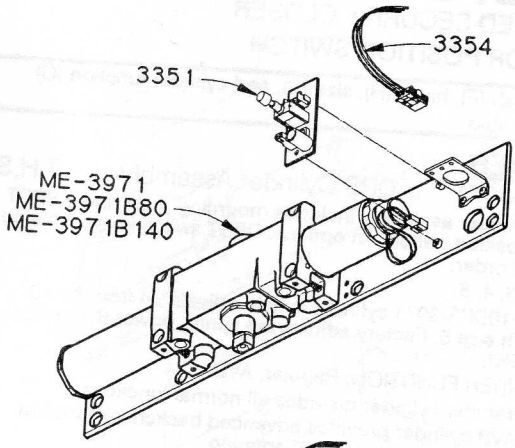

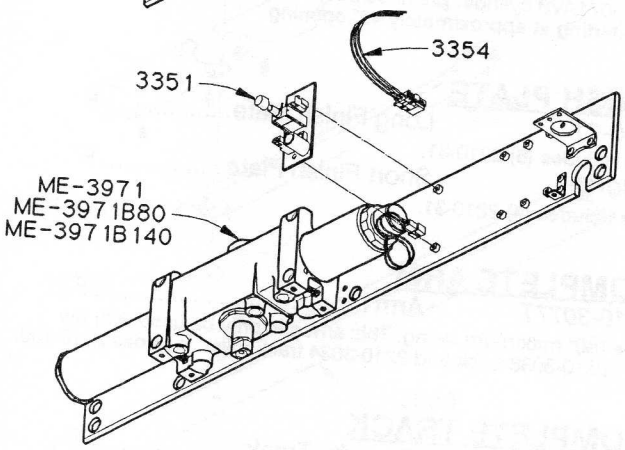

REGULAR ARM 4410ME-3077

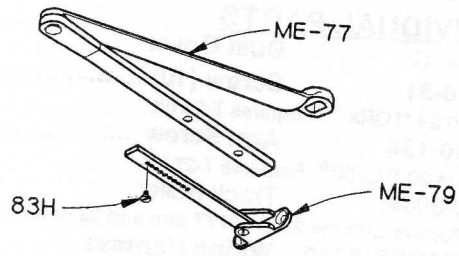

LONG ARM 4410MEL-3077

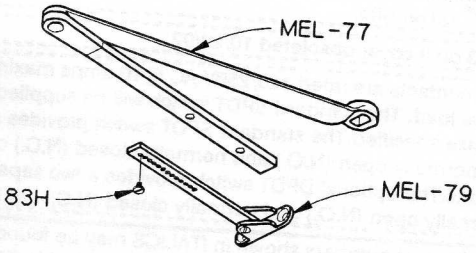

© 1992 Schlage Lock Co.
LCN CLOSERS, 121 W.Railroad Ave.,Princeton, IL 61356
Phone (815) 875-3311 Fax (815) 875-3222

2210 DPS SERIES

CONCEALED SECURITY CLOSER
WITH DOOR POSITION SWITCH

Specify finish (F), hand (H), size (S), and cylinder function (C) where indicated.

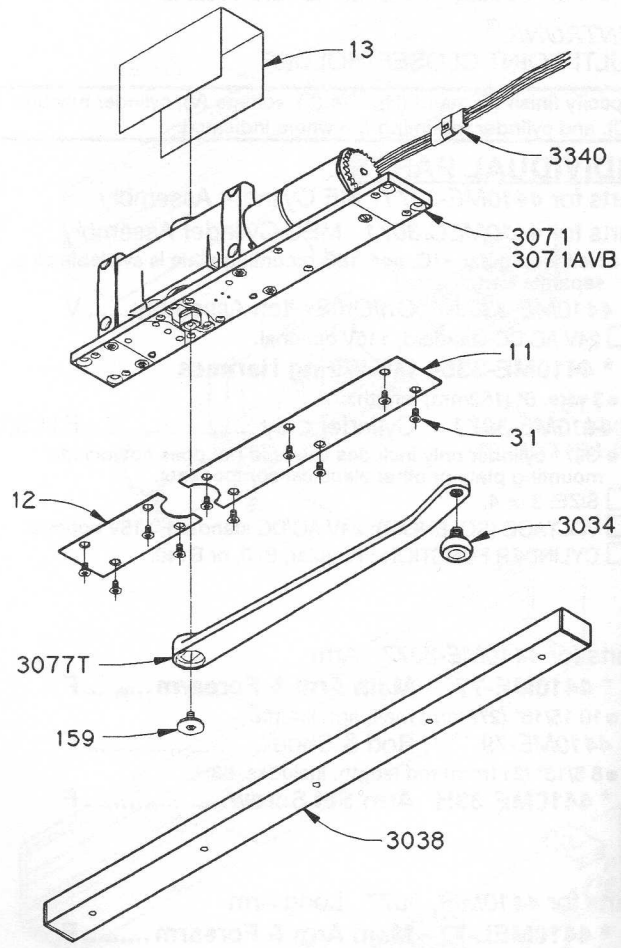

CYLINDER

2210DPS-3071 DPS Cylinder Assembly ..... F,H,S,C

- DPS cylinder assembly includes mounting plate and a SPDT door position switch. An optional DPDT switch is available on special order.

☐ SIZE: 3, 4, 5.

- The 2210DPS-3071 cylinder is field adjustable from size 3 through size 5. Factory adjusts the spring power to the size specified.

☐ CYLINDER FUNCTION: Regular, AVB.

- -3071 regular cylinder provides all normal functions.
- -3071AVB cylinder provides advanced backcheck function starting at approximately 45° opening.

FINISH PLATE

2210-11 Long Finish Plate..... F

- Includes (6) 2210-31.

2210-12 Short Finish Plate ..... F

- Includes (4) 2210-31.

COMPLETE ARM

2210-3077T Arm ..... F,H

- 180° maximum swing. This arm can only be used with the 2210-3038 track and 2210-3034 track roller. Includes 2210-159.

COMPLETE TRACK

2210-3038 Security Track ..... F

- 2210-3038 can only be used with the 2210-3034 track roller.
- Hold-open and/or bumper functions are not available with this track.
- Mounts with five (5) 1/4-20 "TORX"® screws. Requires T-27 bit.

INDIVIDUAL PARTS

***2210-13 Dust Cover**

***2210-31 Screw (10)..... F**

- 10-24 "TORX"®. Requires T-20 bit.

***2210-159 Arm Screw ..... F**

- 1/4-20 "TORX"®. Requires T-27 bit.

2210-3034 Track Roller

- For use with the 2210-3077T arm and 2210-3038 track only.

*** 2210DPS-3340 Wiring Harness**

- 3 conductor, 18 gauge, 12" (305mm) length. SPDT units require 1 harness and DPDT units require 2.

Installation of this product will require the use of T-20 and T-27 "TORX"® driver bits.

2210-13 dust cover obsoleted 10/23/92.

Switch contacts are rated 125/250V AC @10 amps maximum resistive load. The standard SPDT switch will be supplied unless otherwise specified.The standard SPDT switch provides a single set of normally open (N.O.) and normally closed (N,C.) contacts. functions.The optional DPDT switch provides a two separate sets of normally open (N.O.) and normally closed (N,C.) contacts.

Prices for part numbers shown in ITALICS may be found in the LCN PRICE LIST. Prices for part numbers listed in **BOLD**, with a " * " may be found in the **LCN PARTS PRICE LIST**.

LCN CLOSERS, 121 W.Railroad Ave.,Princeton, IL 61356
Phone (815) 875-3311 Fax (815) 875-3222
Form #716-0292-10W
© 1992 Schlage Lock Co.

2210 SERIES

CONCEALED SECURITY CLOSER

Specify finish (F), hand (H), size (S), and cylinder function (C) where indicated.

CYLINDER

2210-3071 Cylinder Assembly ..... F,H,S,C

- The -3071 cylinder assembly includes mounting plate.

☐ SIZE: 3, 4, 5.

- The 2210-3071 cylinder is field adjustable from size 3 through size 5. Factory adjusts the spring power to the size specified.

☐ CYLINDER FUNCTION: Regular, AVB.

- -3071 regular cylinder provides all normal functions.
- -3071AVB cylinder provides advanced backcheck function starting at approximately 45° opening.

FINISH PLATE

2210-11 Long Finish Plate..... F

- Includes (6) 2210-31.

2210-12 Short Finish Plate ..... F

- Includes (4) 2210-31.

COMPLETE ARM

2210-3077T Arm ..... F,H

- 180° maximum swing. This arm can only be used with the 2210-3038 track and 2210-3034 track roller. Includes 2210-159.

COMPLETE TRACK

2210-3038 Security Track ..... F

- 2210-3038 can only be used with the 2210-3034 track roller.
- Hold-open and/or bumper functions are not available with this track.
- Mounts with five (5) 1/4-20 "TORX"® screws. Requires T-27 bit.

INDIVIDUAL PARTS

***2210-13** **Dust Cover**

***2210-31** **Screw (10)..... F**

- 10-24 "TORX"®. Requires T-20 bit.

***2210-159** **Arm Screw ..... F**

- 1/4-20 "TORX"®. Requires T-27 bit.

2210-3034 Track Roller

- For use with the 2210-3077T arm and 2210-3038 track only.

Installation of this product will require the use of T-20 and T-27 "TORX"® driver bits.

2210-13 obsoleted 10/23/92.

Prices for part numbers shown in ITALICS may be found in the LCN PRICE LIST. Prices for part numbers listed in **BOLD**, with a " * " may be found in the **LCN PARTS PRICE LIST**.

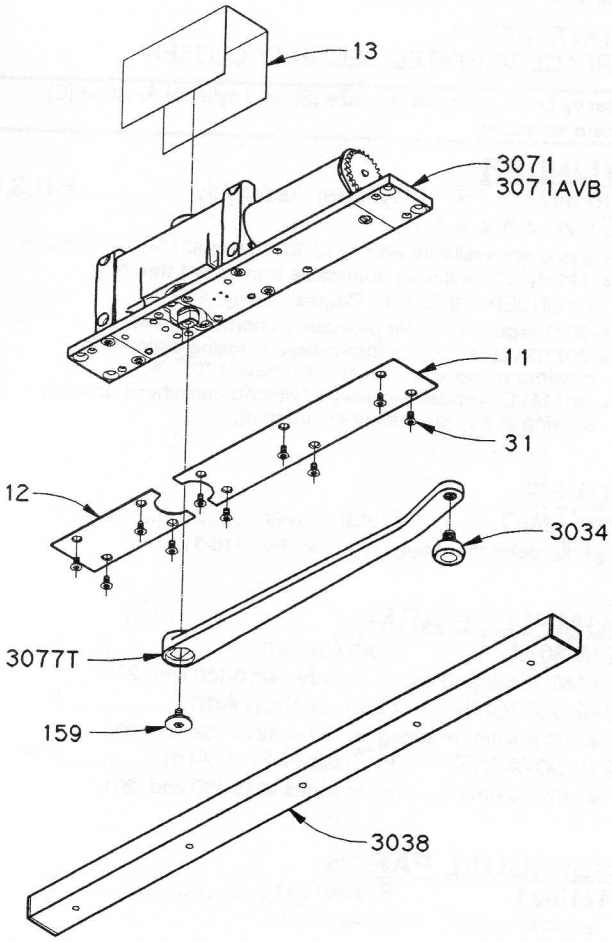

© 1992 Schlage Lock Co.
LCN CLOSERS, 121 W.Railroad Ave.,Princeton, IL 61356
Phone (815) 875-3311 Fax (815) 875-3222

4210 SERIES

SMOOTHEE®
SURFACE MOUNTED SECURITY CLOSER

Specify finish (F), hand (H), size (S), and cylinder function (C) where indicated.

CYLINDER

4210-3071 Cylinder Assembly ..... F,H,S,C

☐ SIZE: 2, 3, 4, 5, 6, N.
- Size 6 not available with 4210-3071DA or 4210-3049CNS arm.
- 4210N-3071 cylinder adjustable from size 1 thru 5.

☐ CYLINDER FUNCTION: Regular, Delay, AVB.
- -3071 regular cylinder provides all normal functions.
- -3071DA cylinder provides delayed closing action from maximum opening until approximately 70°.
- -3071AVB cylinder provides advanced backcheck function starting at approximately 45° opening.

COVER

4210-72MC Metal Cover ..... F
- Four point mounting. Includes (4) 4210-31.

COMPLETE ARM

4210-3077 Regular Arm..... F
- 180° maximum swing. Includes 4210-159 and -201.

4210-3077CNS Cush-N-Stop Arm..... F
- 110° maximum swing. Includes 4210-159 and -201.

4210-3049CNS H Cush-N-Stop Arm ..... F,H
- 110° maximum swing. Includes 4210-159 and -201.

INDIVIDUAL PARTS

***4210-31 Screw (4) ..... F**
- 12-24 "TORX"®. Requires T-25 bit.

***4210-159 Arm Screw ..... F**
- 1/4-20 "TORX"®. Requires T-27 bit.

4210-201 5th Screw Spacer

Installation of this product will require the use of T-25 and T-27 "TORX"® driver bits.

Individual parts for 4210 Series closer arms are not available because the arms are pinned at the factory. Arms must be replaced as a complete unit.

Prices for part numbers shown in ITALICS may be found in the LCN PRICE LIST. Prices for part numbers shown in **BOLD**, with a " * " may be found in the **LCN PARTS PRICE LIST.**

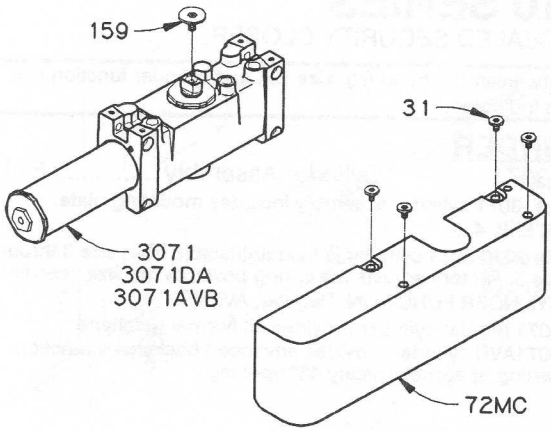

REGULAR ARM 4210-3077

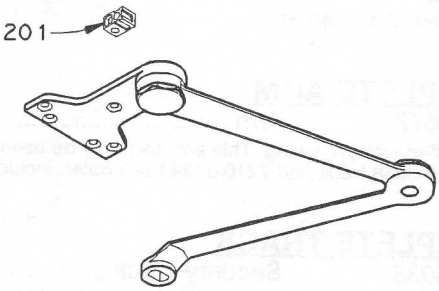

CUSH-N-STOP ARM 4210-3077CNS

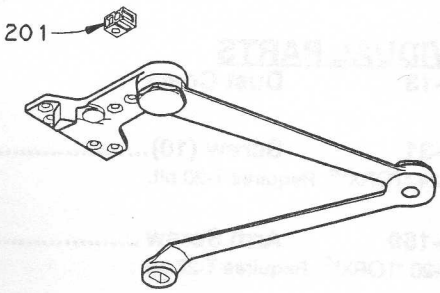

H CUSH-N-STOP ARM 4210-3049CNS

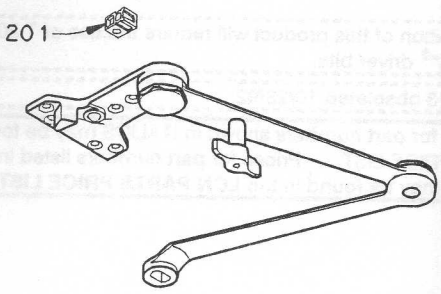

LCN CLOSERS, 121 W.Railroad Ave.,Princeton, IL 61356
Phone (815) 875-3311 Fax (815) 875-3222

Form #716-0292-10M

© 1992 Schlage Lock Co.

4210T SERIES

SMOOTHEE®
SURFACE MOUNTED TRACK CLOSER
SECURITY TRACK CLOSER

Specify finish (F), hand (H), size (S), and cylinder function (C) where indicated.

CYLINDER

4210T-3071 Cylinder Assembly ..... F,H,S,C

☐ SIZE: 3, 4.

☐ CYLINDER FUNCTION: Regular, AVB.

- -3071 regular cylinder provides all normal functions.
- -3071AVB cylinder provides advanced backcheck function starting at approximately 45° opening.

COVER

4210-72MC Metal Cover ..... F

- Four point mounting. Includes (4) 4210-31.

COMPLETE ARM

4210T-3077T Arm ..... F

- 110° maximum swing. This arm can only be used with the 4210T-3038 track and 4210T-3034 track roller. Includes 4210-159.

COMPLETE TRACK

4210T-3038 Security Track ..... F

- 4210T-3038 can only be used with the 4210T-3034 track roller.
- Hold-open and/or bumper functions are not available with this track.
- Mounts with five (5) 1/4-20 "TORX"® screws. Requires T-25 bit.

INDIVIDUAL PARTS

***4210-31 Screw (4) ..... F**

- 12-24 "TORX"®. Requires T-25 bit.

***4210-159 Arm Screw ..... F**

- 1/4-20 "TORX"®. Requires T-27 bit.

4210T-3034 Track Roller

- For use with the 4210T-3077T arm and 4210T-3038 track only.

Installation of this product will require the use of T-25 and T-27 "TORX"® driver bits.

Prices for part numbers shown in ITALICS may be found in the LCN PRICE LIST. Prices for part numbers listed in **BOLD**, with a " * " may be found in the **LCN PARTS PRICE LIST**.

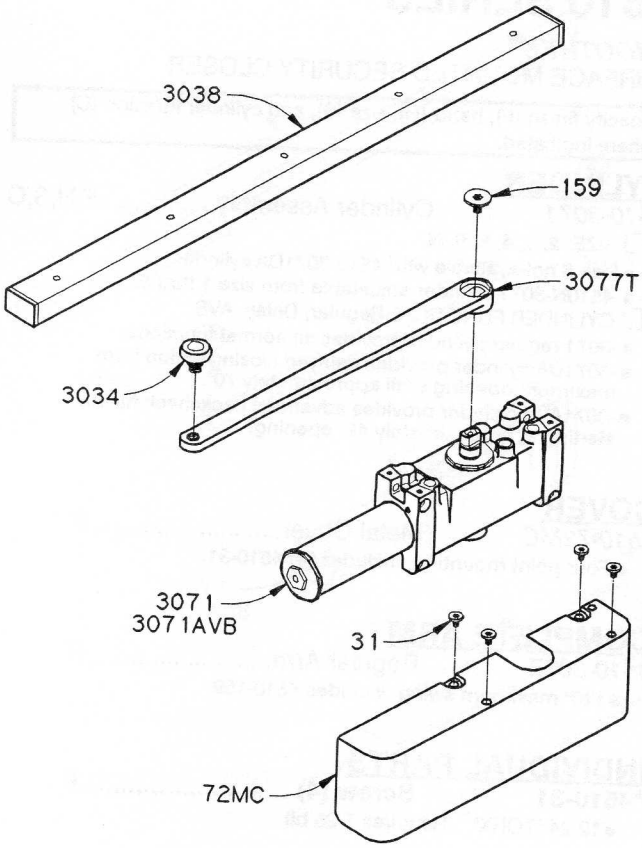

© 1992 Schlage Lock Co.
LCN CLOSERS, 121 W.Railroad Ave.,Princeton, IL 61356
Phone (815) 875-3311 Fax (815) 875-3222

4510 SERIES

SMOOTHEE®
SURFACE MOUNTED SECURITY CLOSER

Specify finish (F), hand (H), size (S), and cylinder function (C) where indicated.

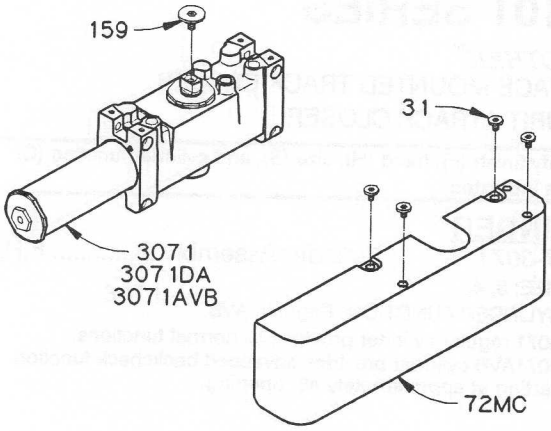

CYLINDER

4510-3071 Cylinder Assembly ..... F,H,S,C

☐ SIZE: 2, 3, 4, 5, 6, N.
- Size 6 not available with 4510-3071DA cylinder.
- 4510N-3071 cylinder adjustable from size 1 thru 5.

☐ CYLINDER FUNCTION: Regular, Delay, AVB.
- -3071 regular cylinder provides all normal functions.
- -3071DA cylinder provides delayed closing action from maximum opening until approximately 70°.
- -3071AVB cylinder provides advanced backcheck function starting at approximately 45° opening.

COVER

4510-72MC Metal Cover ..... F
- Four point mounting. Includes (4) 4510-31.

COMPLETE ARM

4510-3077 Regular Arm..... F
- 140° maximum swing. Includes 4510-159.

REGULAR ARM 4510-3077

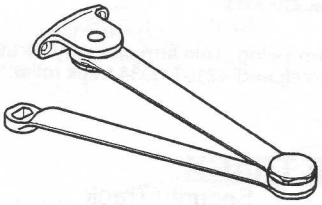

INDIVIDUAL PARTS

***4510-31 Screw (4) ..... F**
- 12-24 "TORX"®. Requires T-25 bit.

***4510-159 Arm Screw ..... F**
- 1/4-20 "TORX"®. Requires T-27 bit.

Installation of this product will require the use of T-25 and T-27 "TORX"® driver bits.

Individual parts for 4510 Series closer arm are not available because the arms are pinned at the factory. Arms must be replaced as a complete unit.

Prices for part numbers shown in ITALICS may be found in the LCN PRICE LIST. Prices for part numbers shown in **BOLD**, with a " * " may be found in the **LCN PARTS PRICE LIST.**

LCN CLOSERS, 121 W.Railroad Ave.,Princeton, IL 61356
Phone (815) 875-3311 Fax (815) 875-3222

Form #716-0292-10M

© 1992 Schlage Lock Co.

4510T SERIES

SMOOTHEE®
SURFACE MOUNTED TRACK CLOSER
SECURITY TRACK CLOSER

Specify finish (F), hand (H), size (S), and cylinder function (C) where indicated.

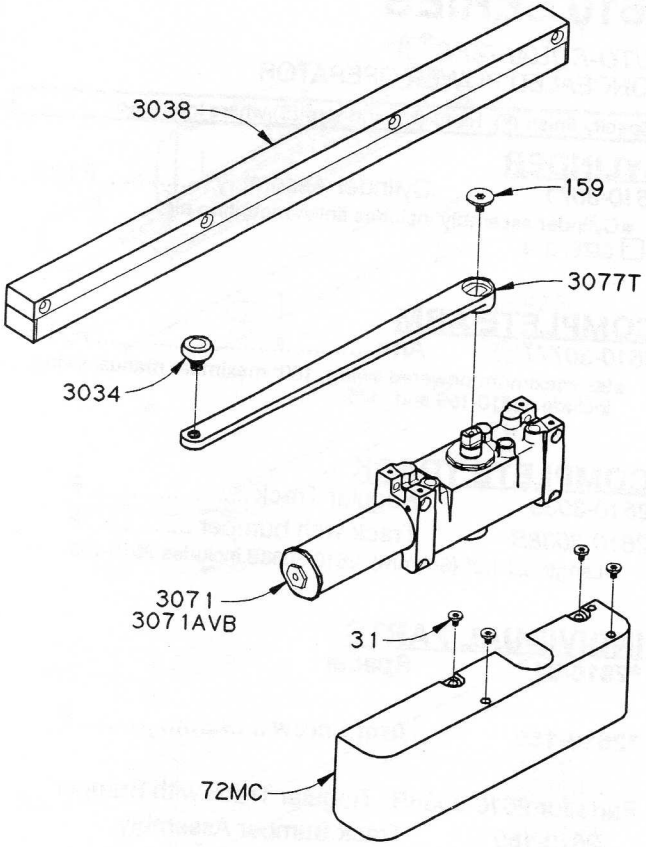

CYLINDER

4510T-3071 Cylinder Assembly ..... F,H,S,C

☐ SIZE: 3, 4.
☐ CYLINDER FUNCTION: Regular, AVB.

- -3071 regular cylinder provides all normal functions.
- -3071AVB cylinder provides advanced backcheck function starting at approximately 45° opening.

COVER

4510-72MC Metal Cover ..... F

- Four point mounting. Includes (4) 4510-31.

COMPLETE ARM

4510T-3077T Arm ..... F

- 110° maximum swing. This arm can only be used with the 4510T-3038 track and 4510T-3034 track roller. Includes 4510-159.

COMPLETE TRACK

4510T-3038 Security Track ..... F

- 4510T-3038 can only be used with the 4510T-3034 track roller.
- Hold-open and/or bumper functions are not available with this track.
- Mounts with four (4) 1/4 - 20 "TORX"® screws. Requires T-27 bit.

INDIVIDUAL PARTS

***4510-31** **Screw (4)** ..... **F**

- 12-24 "TORX"®. Requires T-25 bit.

***4510-159** **Arm Screw** ..... **F**

- 1/4-20 "TORX"®. Requires T-27 bit.

4510T-3034 Track Roller

- For use with the 4510T-3077T arm and 4510T-3038 track only.

Installation of this product will require the use of T-25 and T-27 "TORX"® driver bits.

Prices for part numbers shown in ITALICS may be found in the LCN PRICE LIST. Prices for part numbers listed in **BOLD**, with a " * " may be found in the **LCN PARTS PRICE LIST**.

© 1992 Schlage Lock Co.
LCN CLOSERS, 121 W.Railroad Ave.,Princeton, IL 61356
Phone (815) 875-3311 Fax (815) 875-3222

2610 SERIES

AUTO-EQUALIZER®
CONCEALED POWER OPERATOR

Specify finish (F), hand (H), and size (S) where indicated.

CYLINDER

2610-3071 Cylinder Assembly ..... F,H,S
- Cylinder assembly includes finish/mounting plate.

☐ SIZE: 3, 4.

COMPLETE ARM

2610-3077T Arm ..... F,H
- 90° maximum powered swing, 180° maximum manual swing. Includes 2610-159 and -425.

COMPLETE TRACK

2610-3038 Regular Track ..... F

2610-3038B Track with bumper ..... F
- Length 25 1/2" (648mm). 2610-3038B includes 2610-169.

INDIVIDUAL PARTS

***2610-61** **Spacer**

***2610-159** **Arm Screw ..... F**

Parts for *2610-3038B* Regular Track with Bumper

2610-169 Track Bumper Assembly
- Includes post and mounting screw.

*** 2610-3938B** **B Track only ..... F**
- Length 25 1/2" (648mm). Mounts 2610-169 only.

Parts for *2610-3077T* Arm

*** 2610-78** **Arm and Tube (w/–83H)..... F,H**

*** 2610-82** **Rod (w/–425)..... F**

*** 2610-83H** **Arm Set Screw..... F**

*** 2610-425** **Roller Locking Screw ..... F**

2610-3034 Track Roller

Prices for part numbers shown in ITALICS may be found in the LCN PRICE LIST. Prices for part numbers listed in **BOLD**, with a " * " may be found in the **LCN PARTS PRICE LIST.**

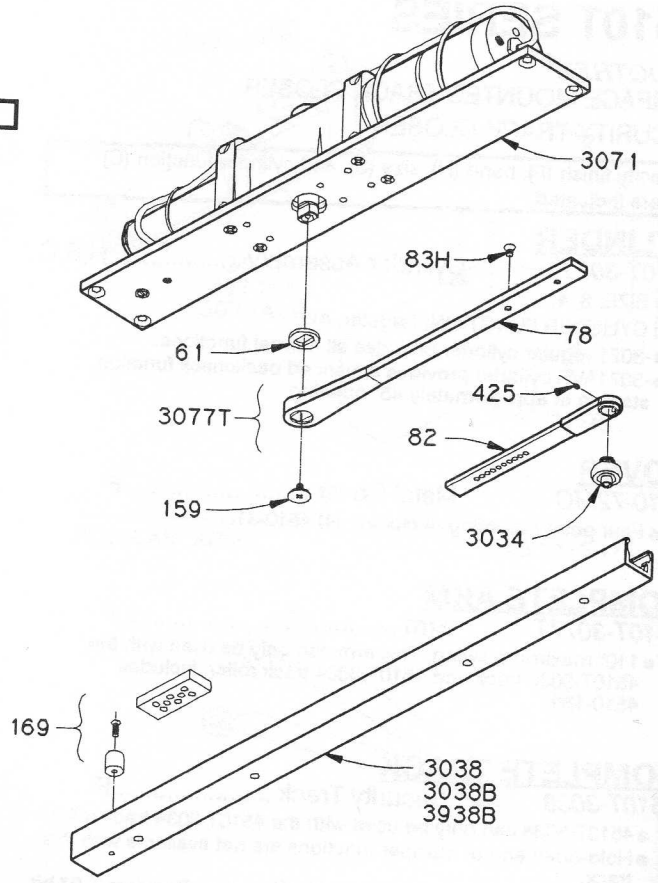

LCN CLOSERS, 121 W.Railroad Ave.,Princeton, IL 61356
Phone (815) 875-3311 Fax (815) 875-3222

Form #716-0292-10M

© 1992 Schlage Lock Co.

2910 SERIES

EQUALIZER®
CONCEALED POWER ASSIST CLOSER

Specify finish (F), hand (H), and size (S) where indicated.

CYLINDER

2910-3071 Cylinder Assembly ..... F,H,S
- Cylinder assembly includes mounting plate.
- ☐ SIZE: 4, 5, 6.

FINISH PLATE

2910-11 Finish Plate ..... F
- Includes (3) 2910-31.

COMPLETE ARM

2910-3077T Arm ..... F,H
- 180° maximum swing. Includes 2910-159 and -425.

COMPLETE TRACK

2910-3038 Regular Track ..... F
2910-3038B Regular Track with bumper.. F
- 2910-3038B includes bumper 2910-169.

2910-3038H Hold-Open Track..... F
2910-3038HB H Track with bumper..... F
- 2910-3038H includes hold-open clip 2910-3054.
- 2910-3038HB includes 2910-169 and -3054.

INDIVIDUAL PARTS

***2910-31 Screw (3) ..... F**

***2910-159 Arm Screw ..... F**

Parts for *2910-3038B* Regular Track with Bumper
Parts for *2910-3038H* Hold-Open Track
Parts for *2910-3038HB* H Track with bumper

2910-169 Track Bumper Assembly
- For -3038B and -3038HB. Includes post and mounting screw.

2910-3054 Hold-Open Spring Clip
- For -3038H and -3038HB. Includes mounting screws.

*** 2910-3938H H Track only ..... F**

Parts for *2910-3077T* Arm

*** 2910-425 Roller Locking Screw ..... F**
2910-3034 Track Roller

Prices for part numbers shown in ITALICS may be found in the LCN PRICE LIST. Prices for part numbers listed in **BOLD**, with a " * " may be found in the **LCN PARTS PRICE LIST**.

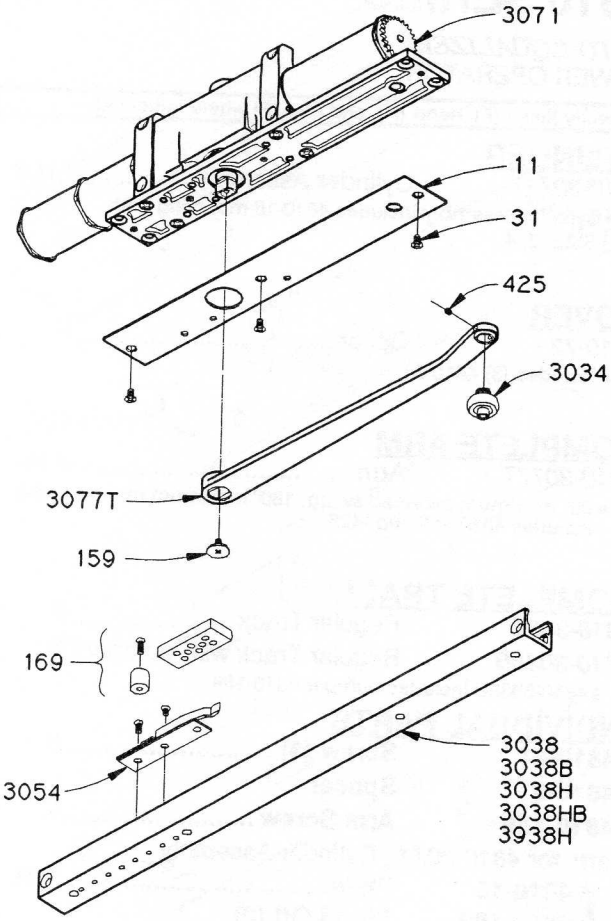

© 1992 Schlage Lock Co.
LCN CLOSERS, 121 W.Railroad Ave.,Princeton, IL 61356
Phone (815) 875-3311 Fax (815) 875-3222

4810 SERIES

AUTO-EQUALIZER®
POWER OPERATOR

Specify finish (F), hand (H), and size (S) where indicated.

CYLINDER

4810-3071 Cylinder Assembly ..... F,H,S
- Cylinder assembly includes 4810-18 mounting plate.

☐ SIZE: 3, 4.

COVER

4810-72 Cover ..... F
- Includes (3) 4810-31.

COMPLETE ARM

4810-3077T Arm ..... F,H
- 90° maximum powered swing, 180° maximum manual swing. Includes 4810-159 and -425.

COMPLETE TRACK

4810-3038 Regular Track ..... F
4810-3038B Regular Track with bumper.. F
- 4810-3038B includes bumper 4810-169.

INDIVIDUAL PARTS

***4810-31 Screw (3) ..... F**
***4810-61 Spacer**
***4810-159 Arm Screw ..... F**

Parts for *4810-3071* Cylinder Assembly
*** 4810-18 Plate..... F,H**
*** 4810-182 Stand Off (2)**
4810-3971 Cylinder only ..... F,H,S
- -3971 cylinder only does not include mounting plate or stand offs.

☐ SIZE: 3, 4.

Parts for *4810-3038* Regular Track
Parts for *4810-3038B* Regular Track with Bumper
*** 4810-73 End Cap (2) ..... F**
*** 4810-141 Plug (4) ..... F**
4810-169 Track Bumper Assembly
- For -3038B. Includes post and mounting screw.

*** 4810-3938H H Track only ..... F**
- For both -3038 and -3038B.

Parts for *4810-3077T* Arm
*** 4810-78 Arm and Tube (w/–83H)..... F,H**
*** 4810-82 Rod (w/–425)..... F**
*** 4810-83H Arm Set Screw..... F**
*** 4810-425 Roller Locking Screw ..... F**
4810-3034 Track Roller

Prices for part numbers shown in ITALICS may be found in the LCN PRICE LIST. Prices for part numbers listed in **BOLD**, with a " * " may be found in the **LCN PARTS PRICE LIST**.

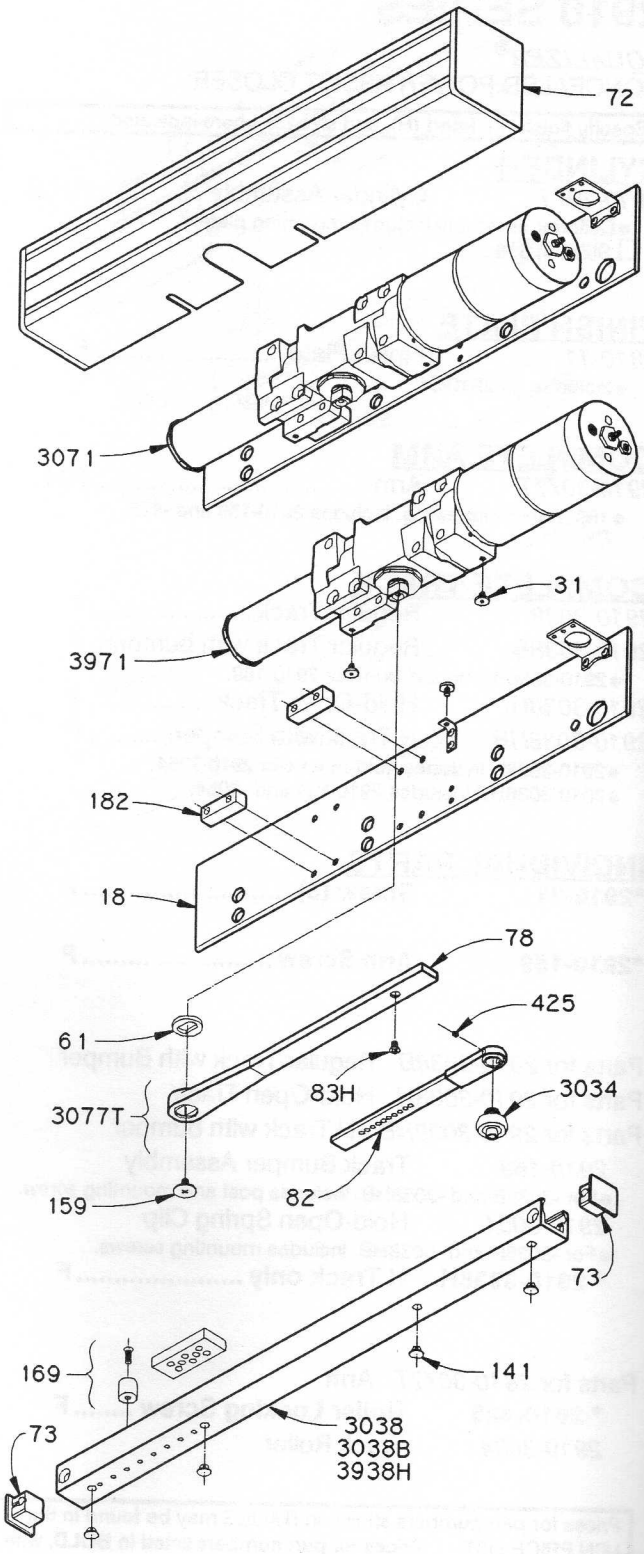

LCN CLOSERS, 121 W.Railroad Ave.,Princeton, IL 61356
Phone (815) 875-3311 Fax (815) 875-3222

Form #716-0292-10M
© 1992 Schlage Lock Co.

4820 SERIES

AUTO-EQUALIZER®
POWER OPERATOR

Specify finish (F), hand (H), size (S) and cylinder mounting (M) where indicated.

CYLINDER

4820-3071 Cylinder Assembly ..... F,H,S,M

- Cylinder assembly includes mounting plate.

☐ SIZE: 3, 4, 5.

☐ MOUNTING (CYLINDER): Regular, Flush Ceiling.

- Regular 4820-18 mounting plate centers the closer on a minimum 1 1/2" (38mm) face frame. Requires a minimum 2 5/8" (67mm) vertical clearance above lower edge of frame.
- Where the ceiling is flush with the top of a 1 1/2" (38mm) face frame, a 4820-18G mounting plate is available under the Special Template program and can be substituted for the 4820-18 mounting plate.

COVER

4820-72 Cover ..... F

- Includes (3) 4820-31.

COMPLETE ARM

4820-3077 Regular Arm..... F,H

- 90° maximum powered swing, 100° maximum manual swing for reveals up to 4 5/16" (110mm). Includes 4820-159.
- Substitute 4820-79LR for reveals up to 7 1/2" (191mm).

INDIVIDUAL PARTS

***4820-31 Screw (3) ..... F**

***4820-159 Arm Screw ..... F**

Parts for *4820-3071* Cylinder Assembly

*** 4820-xx Plate..... F,H**

☐ -18 standard, -18G optional.

*** 4920-182 Stand Off (2)**

4820-3971 Cylinder only ..... F,H,S

- -3971 cylinder only does not include mounting plate or stand offs.

☐ SIZE: 3, 4, 5.

Parts for *4820-3077* Regular Arm

*** 4820-77 Main Arm & Forearm ..... F,H**

4820-79 Rod & Shoe (w/–83) ..... F

- 8 5/16" (211mm) rod length.

4820-79LR Long Rod & Shoe (w/–83) .... F

- 12 3/8" (314mm) rod length.

*** 4820-83 Arm Set Screw..... F**

Prices for part numbers shown in ITALICS may be found in the LCN PRICE LIST. Prices for part numbers listed in **BOLD**, with a " * " may be found in the **LCN PARTS PRICE LIST**.

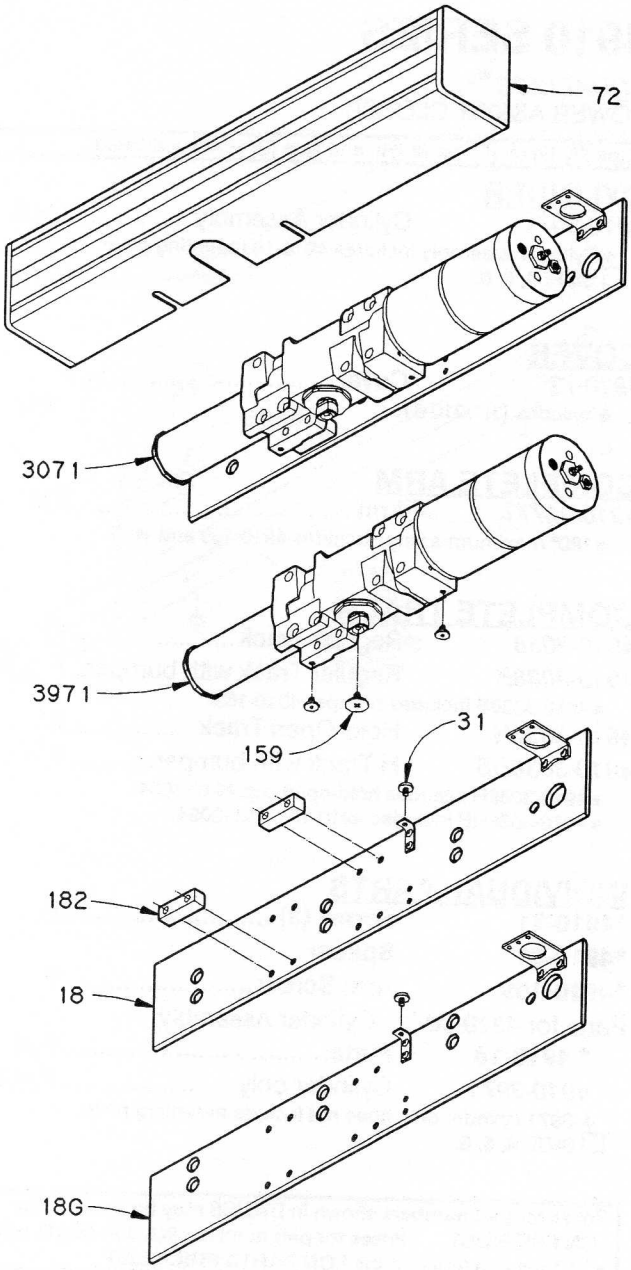

REGULAR ARM 4820-3077

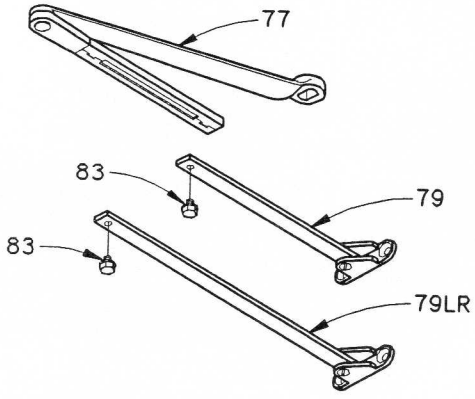

© 1992 Schlage Lock Co.
LCN CLOSERS, 121 W.Railroad Ave.,Princeton, IL 61356
Phone (815) 875-3311 Fax (815) 875-3222

4910 SERIES

EQUALIZER®
POWER ASSIST CLOSER

Specify finish (F), hand (H), and size (S) where indicated.

CYLINDER

4910-3071 Cylinder Assembly ..... F,H,S
- Cylinder assembly includes 4910-18 mounting plate.

☐ SIZE: 4, 5, 6.

COVER

4910-72 Cover ..... F
- Includes (3) 4910-31.

COMPLETE ARM

4910-3077T Arm ..... F,H
- 180° maximum swing. Includes 4910-159 and -425.

COMPLETE TRACK

4910-3038 Regular Track ..... F

4910-3038B Regular Track with bumper.. F
- 4910-3038B includes bumper 4910-169.

4910-3038H Hold-Open Track..... F

4910-3038HB H Track with bumper..... F
- 4910-3038H includes hold-open clip 4910-3054.
- 4910-3038HB includes 4910-169 and -3054.

INDIVIDUAL PARTS

***4910-31 Screw (3) ..... F**

***4910-61 Spacer**

***4910-159 Arm Screw ..... F**

Parts for *4910-3071* Cylinder Assembly

*** 4910-18 Plate..... F,H**

4910-3971 Cylinder only ..... F,H,S
- -3971 cylinder only does not include mounting plate.

☐ SIZE: 4, 5, 6.

Prices for part numbers shown in ITALICS may be found in the LCN PRICE LIST. Prices for part numbers listed in **BOLD**, with a " * " may be found in the **LCN PARTS PRICE LIST.**

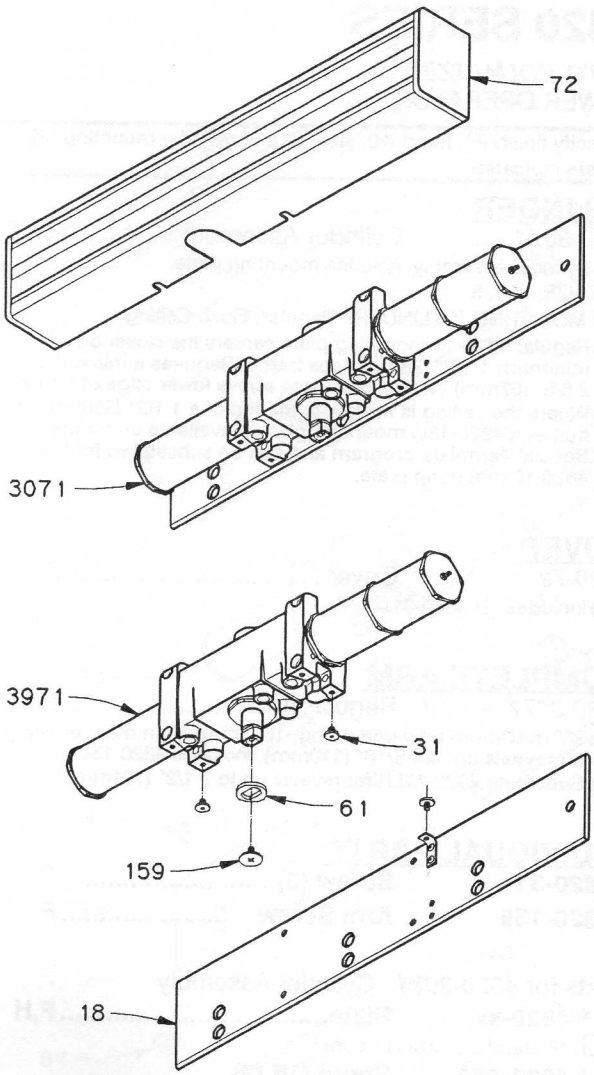

LCN CLOSERS, 121 W.Railroad Ave.,Princeton, IL 61356
Phone (815) 875-3311 Fax (815) 875-3222

Form #716-0292-10M

© 1992 Schlage Lock Co.

4910 SERIES

EQUALIZER®
POWER ASSIST CLOSER

Specify finish (F), hand (H), and size (S) where indicated.

INDIVIDUAL TRACK & ARM PARTS

Parts for *4910-3038* Regular Track
Parts for *4910-3038B* Regular Track with Bumper
Parts for *4910-3038H* Hold-Open Track
Parts for *4910-3038HB* H Track with bumper

*** 4910-73 End Cap (2) ..... F**
*** 4910-141 Plug (4) ..... F**
4910-169 Track Bumper Assembly
- For -3038B and -3038HB. Includes post and mounting screw.

4910-3054 Hold-Open Spring Clip
- For -3038H and -3038HB. Includes mounting screws.

*** 4910-3938H H Track only ..... F**

Parts for *4910-3077T* Arm

*** 4910-425 Roller Locking Screw ..... F**
4910-3034 Track Roller

Prices for part numbers shown in ITALICS may be found in the LCN PRICE LIST. Prices for part numbers listed in **BOLD**, with a " * " may be found in the **LCN PARTS PRICE LIST.**

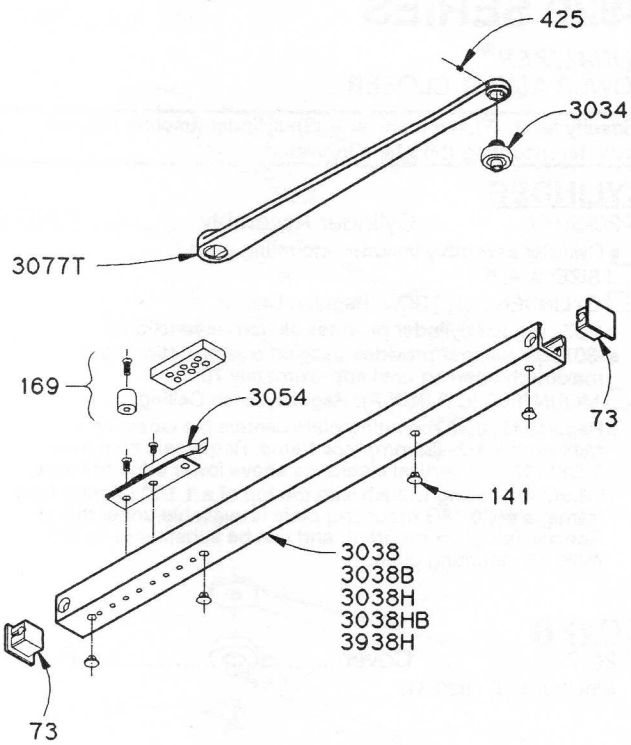

© 1992 Schlage Lock Co.
LCN CLOSERS, 121 W.Railroad Ave.,Princeton, IL 61356
Phone (815) 875-3311 Fax (815) 875-3222

4920 SERIES

EQUALIZER®
POWER ASSIST CLOSER

Specify finish (F), hand (H), size (S), cylinder function (C), and cylinder mounting (M) where indicated.

CYLINDER

4920-3071 Cylinder Assembly ..... F,H,S,C,M

- Cylinder assembly includes mounting plate.

☐ SIZE: 3, 4, 5.

☐ CYLINDER FUNCTION: Regular, Delay.

- -3071 regular cylinder provides all normal functions.
- -3071DA cylinder provides delayed closing action from maximum opening until approximately 70°.

☐ MOUNTING (CYLINDER): Regular, Flush Ceiling.

- Regular 4920-18 mounting plate centers the closer on a minimum 1 1/2" (38mm) face frame. Requires a minimum 2 5/8" (67mm) vertical clearance above lower edge of frame.
- Where the ceiling is flush with the top of a 1 1/2" (38mm) face frame, a 4920-18G mounting plate is available under the Special Template program, and can be substituted for the 4920-18 mounting plate.

COVER

4920-72 Cover ..... F

- Includes (3) 4920-31.

COMPLETE ARM

4920-3077 Regular Arm..... F,H

- 100° maximum swing for reveals up to 4 13/16" (122mm). Substitute 4920-79LR for reveals up to 8" (204mm). Includes 4920-159.

4920-3049 Hold-Open Arm ..... F,H

- 100° maximum swing where the reveal does not exceed 4 9/16" (116mm). Includes 4920-159.

INDIVIDUAL PARTS

***4920-31 Screw (3) ..... F**

***4920-159 Arm Screw ..... F**

Parts for *4920-3071* Cylinder Assembly

*** 4920-xx Plate..... F,H**

☐ -18 standard, -18G optional.

4920-3971 Cylinder only ..... F,H,S,C

- -3971 cylinder only does not include mounting plate.

☐ SIZE: 3, 4, 5.

☐ CYLINDER FUNCTION: Regular (-3071), Delay (-3071DA).

Prices for part numbers shown in ITALICS may be found in the LCN PRICE LIST. Prices for part numbers listed in **BOLD**, with a " * " may be found in the **LCN PARTS PRICE LIST**.

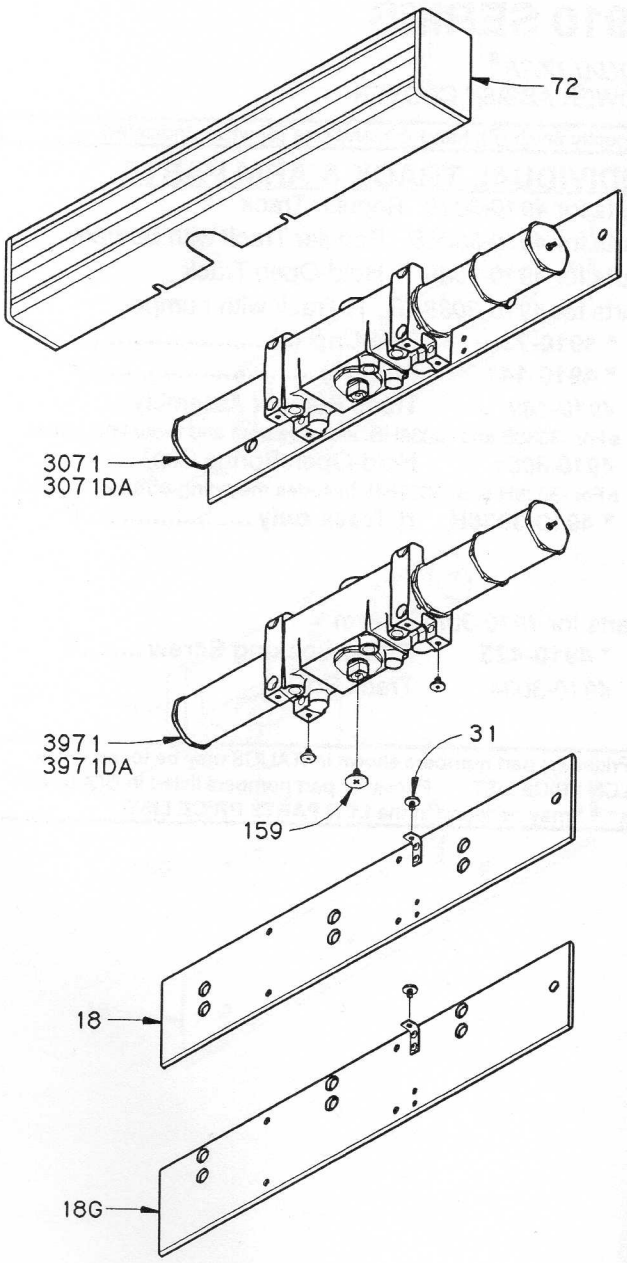

LCN CLOSERS, 121 W.Railroad Ave.,Princeton, IL 61356
Phone (815) 875-3311 Fax (815) 875-3222

Form #716-0292-10M

© 1992 Schlage Lock Co.

4920 SERIES

EQUALIZER®
POWER ASSIST CLOSER

Specify finish (F) and hand (H) where indicated.

INDIVIDUAL ARM PARTS

Parts for *4920-3077* Regular Arm

*** 4920-77**	**Main Arm & Forearm**	**F,H**
4920-79	Rod & Shoe (w/–83)	F
•8 5/16" (211mm) rod length.		
4920-79LR	Long Rod & Shoe (w/–83)	F
•12 3/8" (314mm) rod length.		
*** 4920-83**	**Arm Set Screw**	**F**

Parts for *4920-3049* Hold-Open Arm

*** 4920-37**	**Hold-Open Stud**	**F,H**
*** 4920-41**	**Hold-Open Nut**	**F,H**
*** 4920-48**	**Hold-Open Forearm**	**F,H**
•8 5/8" (217mm) tube length.		
*** 4920-49**	**Hold-Open Main Arm**	**F,H**
4920-79H	H Rod & Shoe (w/–83H)	F
*** 4920-83H**	**H Arm Set Screw**	**F**

Prices for part numbers shown in ITALICS may be found in the LCN PRICE LIST. Prices for part numbers listed in **BOLD**, with a " * " may be found in the **LCN PARTS PRICE LIST**.

REGULAR ARM 4920-3077

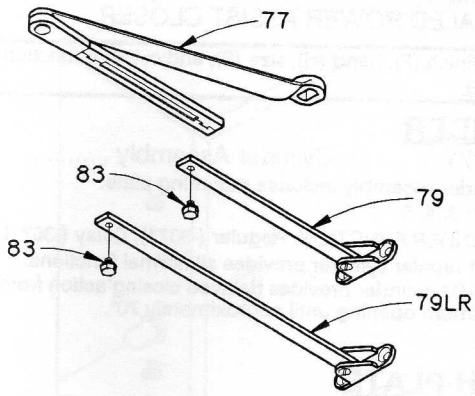

HOLD-OPEN ARM 4920-3049

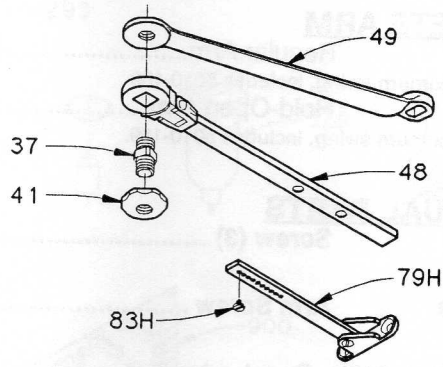

© 1992 Schlage Lock Co.
LCN CLOSERS, 121 W.Railroad Ave.,Princeton, IL 61356
Phone (815) 875-3311 Fax (815) 875-3222

5910 SERIES

EQUALIZER®
CONCEALED POWER ASSIST CLOSER

Specify finish (F), hand (H), size (S), and cylinder function where indicated.

CYLINDER

5910-3071 Cylinder Assembly ..... F,H,S,C
- Cylinder assembly includes mounting plate.

☐ SIZE: 3, 4, 5.
☐ CYLINDER FUNCTION: Regular (-3071), Delay (-3071DA).
- -3071 regular cylinder provides all normal functions.
- -3071DA cylinder provides delayed closing action from maximum opening until approximately 70°.

FINISH PLATE

5910-11 Finish Plate ..... F
- Includes (3) 5910-31.

COMPLETE ARM

5010-3077 Regular Arm..... F
- 100° maximum swing. Includes 5010-159.

5010-3049 Hold-Open Arm ..... F,H
- 100° maximum swing. Includes 5010-159.

INDIVIDUAL PARTS

***5910-31 Screw (3) ..... F**

***5910-159 Arm Screw ..... F**

Parts for *5910-3077* Regular Arm
- *** 5910-77 Main Arm & Forearm ..... F**
- *5910-79* Rod & Shoe (w/–83) ..... F
- *** 5910-83 Arm Set Screw..... F**

Parts for *5910-3049* Hold-Open Arm
- *** 5910-37 Hold-Open Stud..... F,H**
- *** 5910-41 Hold-Open Nut..... F,H**
- *** 5910-48 Hold-Open Forearm..... F,H**
- *** 5910-49 Hold-Open Main Arm..... F,H**
- *5910-79H* H Rod & Shoe (w/–83H) ..... F,H
- *** 5910-83H H Arm Set Screw ..... F,H**

Prices for part numbers shown in ITALICS may be found in the LCN PRICE LIST. Prices for part numbers shown in **BOLD**, with a " * " may be found in the **LCN PARTS PRICE LIST.**

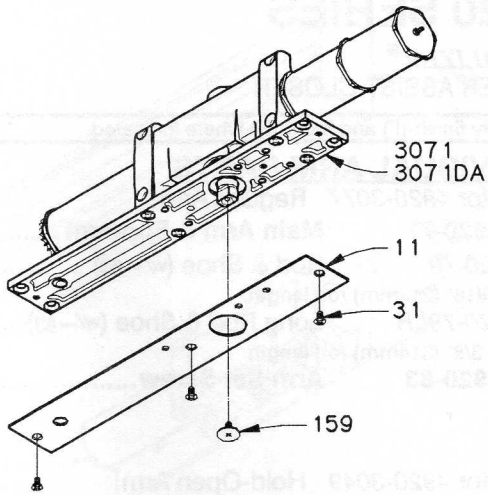

REGULAR ARM 5910-3077

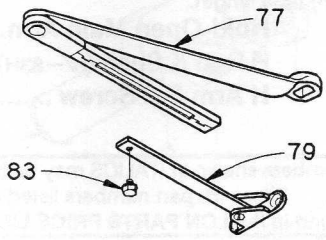

HOLD-OPEN ARM 5910-3049

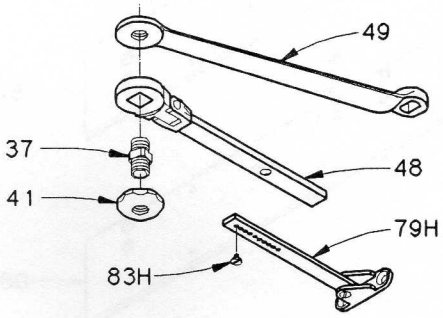

LCN CLOSERS, 121 W.Railroad Ave.,Princeton, IL 61356
Phone (815) 875-3311 Fax (815) 875-3222
Form #716-0292-10M
© 1992 Schlage Lock Co.

AUTO-EQUALIZER® SERIES

COMPLETE CONTROL BOX

901 Single Circuit Control Box

ES901 Single Circuit Control Box

- Includes an isolated relay for control of electric strike or Von Duprin EL device.

902 Dual Circuit Control Box

ES902 Dual Circuit Control Box

- Includes one isolated relay for control of electric strike or Von Duprin EL device.

CONTROL BOX SERVICE PARTS

Parts for *901* Control Box

Parts for *ES901* Control Box

*** 293** **Muffler**

*** 329** **Air Filter Assembly**

*** 390** **Relay**

- For ES901 only.

*** 900** **Power Supply Board**

*** 903** **Timer Module**

*** 903-1** **One Shot Timer Module**

- May be substituted for the standard 903 module.

*** 929** **Filter and Seal for 329**

*** 941** **901 Regulator & Valve Assembly**

- For 901 only.

*** 941ES** **ES901 Regulator & Valve Assembly**

- For ES901 only.

Parts for *902* Control Box

Parts for *ES902* Control Box

*** 293** **Muffler**

*** 329** **Air Filter Assembly**

*** 390** **Relay**

- For ES902 only.

*** 900** **Power Supply Board**

*** 903** **Timer Module (2)**

*** 903-1** **One Shot Timer Module (2)**

- May be substituted for the standard 903 module.

*** 929** **Filter and Seal for 329**

*** 942** **Regulator & Valve Assembly**

- For 902 only.

*** 942ES** **Regulator & Valve Assembly**

- For ES902 only.

Prices for part numbers shown in ITALICS may be found in the LCN PRICE LIST. Prices for part numbers listed in **BOLD**, with a " * " may be found in the **LCN PARTS PRICE LIST.**

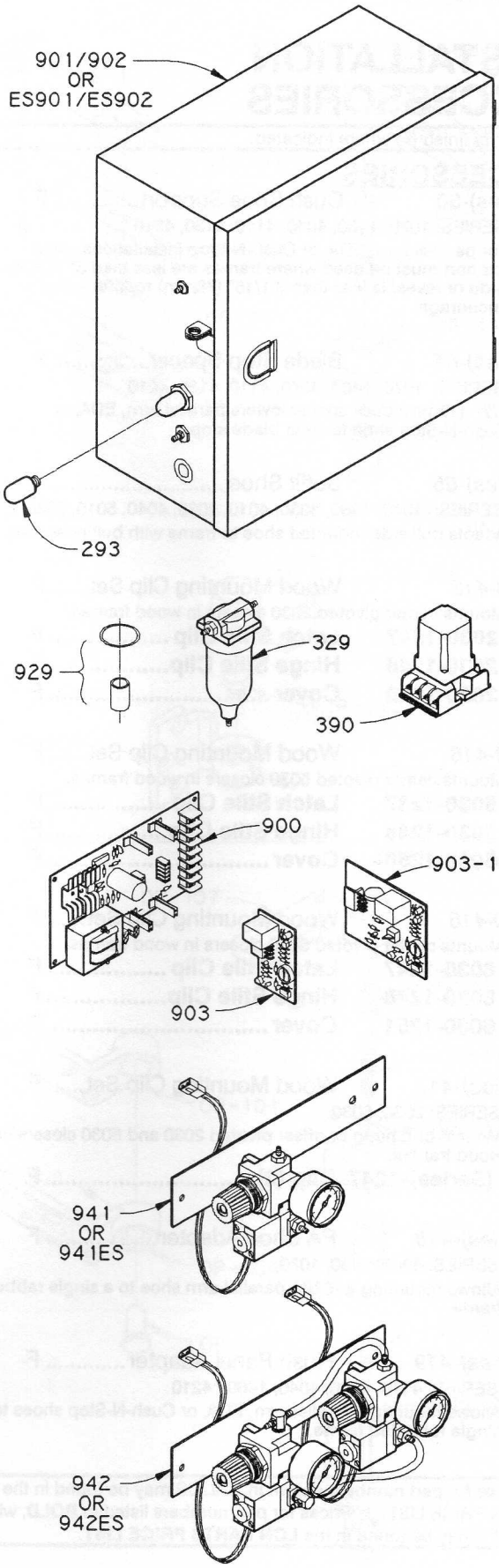

© 1992 Schlage Lock Co.
LCN CLOSERS, 121 W.Railroad Ave.,Princeton, IL 61356
Phone (815) 875-3311 Fax (815) 875-3222

INSTALLATION ACCESSORIES

Specify finish (F) where indicated.

ACCESSORIES

(Series)-30 Cush Shoe Support..... F

☐ SERIES: 1070, 1460, 4040, 4110, 4130, 4210

- For parallel arm, EDA, or Cush-N-Stop installations, shoe support must be used where frames are less than 5" (127mm) wide or reveal is less than 3 1/16" (78mm) for fifth screw anchorage.

(Series)-61 Blade Stop Spacer ..... F

☐ SERIES: 1070, 1460, 4040, 4110, 4130, 4210

- 1/2" (13mm) thick spacer lowers parallel arm, EDA, or Cush-N-Stop shoe to clear blade stop.

(Series)-65 Soffit Shoe ..... F

☐ SERIES: 1070, 1460, 3030, 4010, 4030, 4040, 5010, 5030

- Adapts pull side mounted shoe to frame with bull nose trim.

2030-416 Wood Mounting Clip Set..... F

- Mounts center pivoted 2030 closers in wood frames.

*** 2030-1247 Latch Stile Clip ..... F**
*** 2030-1248 Hinge Stile Clip..... F**
*** 2030-1249 Cover ..... F**

5030-416 Wood Mounting Clip Set..... F

- Mounts center pivoted 5030 closers in wood frames.

*** 5030-1247 Latch Stile Clip ..... F**
*** 5030-1248 Hinge Stile Clip..... F**
*** 5030-1250 Cover ..... F**

6030-416 Wood Mounting Clip Set..... F

- Mounts center pivoted 6030 closers in wood frames.

*** 6030-1247 Latch Stile Clip ..... F**
*** 6030-1248 Hinge Stile Clip..... F**
*** 6030-1251 Cover ..... F**

(Series)-417 Wood Mounting Clip Set..... F

☐ SERIES: 2030, 5030

- Mounts butt hung or offset pivoted 2030 and 5030 closers in wood frames.

*** (Series)-1247 Clip (2)..... F**

(Series)-418 PA Shoe Adapter..... F

☐ SERIES: 4040, 1460, 1070

- Allows mounting a -62PA parallel arm shoe to a single rabbeted frame.

(Series)-419 Flush Panel Adapter..... F

☐ SERIES: 4110, 4130, 4040, 1460, 4210

- Allows mounting parallel arm, EDA, or Cush-N-Stop shoes to a single rabbeted frame.

Prices for part numbers shown in ITALICS may be found in the LCN PRICE LIST. Prices for part numbers listed in **BOLD**, with a " * " may be found in the **LCN PARTS PRICE LIST**.

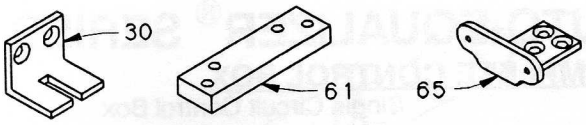

2030-416

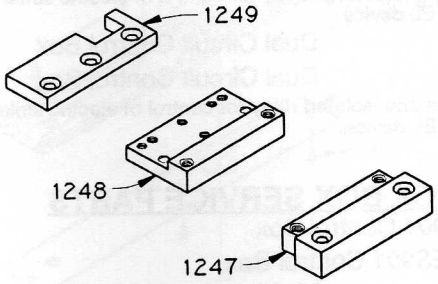

5030-416

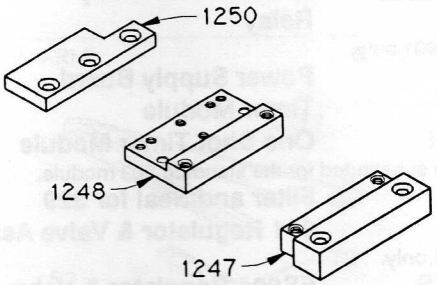

6030-416

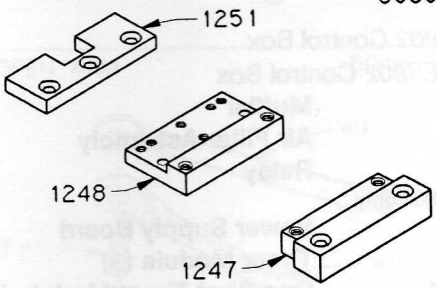

(SERIES)-417

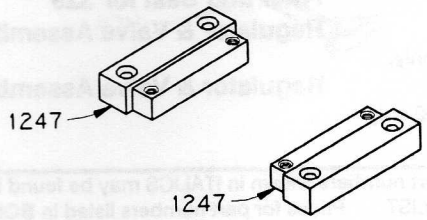

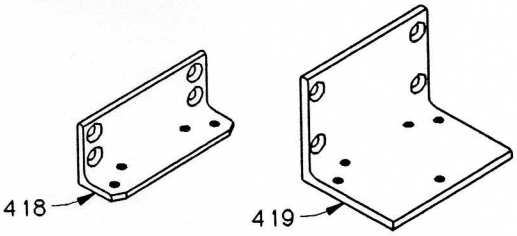

LCN CLOSERS, 121 W.Railroad Ave.,Princeton, IL 61356
Phone (815) 875-3311 Fax (815) 875-3222

Form #716-0292-10M

© 1992 Schlage Lock Co.

PIVOTS

Specify finish (F) and hand (H) where indicated.

COMPLETE PIVOT SETS

CP150 Center Pivot Set ..... F
- Set consists of a CP150-3101 top pivot and a CP150-3107 bottom pivot. See notes at bottom of page.

OP160 Offset Pivot Set..... F,H
- Set consists of an OP160-3101 top pivot and an OP160-3107 bottom pivot. See notes at bottom of page.

OP160J Offset Jamb Pivot Set ..... F,H
- Set consists of an OP160-3101 top pivot and an OPJ160-3107 bottom pivot. See notes at bottom of page.

IP170 Intermediate Pivot ..... F,H

INDIVIDUAL PIVOTS AND PARTS

Parts for *CP150-3101* Top Pivot
- *** CP150-31 Screw (2) ..... F**
- *** CP150-101 Pivot Jamb Leaf**
- *** CP150-104 Pivot Door Leaf..... F**
- *** CP150-112 Pivot Finish Plate..... F**

Parts for *CP150-3107* Bottom Pivot
- *** CP150-107 Door Leaf**
- *** CP150-111 Expansion Anchor**
- *** CP150-113 Bearing Cone Assembly.... F**
- CP150-113 includes set screw. See notes at bottom of page.
- *** CP150-114 Cone Screw**

Parts for *IP170* Intermediate Pivot
- *** IP170-108 Door Leaf..... F,H**
- *** IP170-109 Jamb Leaf..... F,H**
- IP170-109 includes set screw.
- *** IP170-110 Bearing Pin**

Parts for *OP160-3101* Top Pivot
- *** OP160-101 Jamb Leaf..... F,H**
- *** OP160-104 Door Leaf ..... F,H**
- OP160-104 includes set screw.
- *** OP160-105 Bearing Pin Assembly**

Parts for *OP160-3107* Bottom Pivot
- *** OP160-107 Door Leaf..... F,H**
- *** OP160-110 Bearing Pin**
- *** OP160-111 Expansion Anchor**
- *** OP160-113 Bearing Cone Assembly.... F**
- OP160-113 includes set screw. See notes at bottom of page.
- *** OP160-114 Cone Screw**

Parts for *OPJ160-3107* Bottom Jamb Pivot
- *** OP160-107 Door Leaf..... F,H**
- *** OP160-110 Bearing Pin**
- *** OPJ160-120 Jamb Leaf..... F,H**
- OPJ160-120 includes set screw.

CP150 and OP160 bottom pivots and parts CP150-113 and OP160-113 accommodate 3/16" (5mm) to 3/4" (19mm) door clearance. If more clearance is required, specify amount of floor clearance required.

Specify if pivots are to be installed on wood floors.

Prices for part numbers shown in ITALICS may be found in the LCN PRICE LIST. Prices for part numbers listed in **BOLD**, with a " * " may be found in the **LCN PARTS PRICE LIST**

CP150 SET

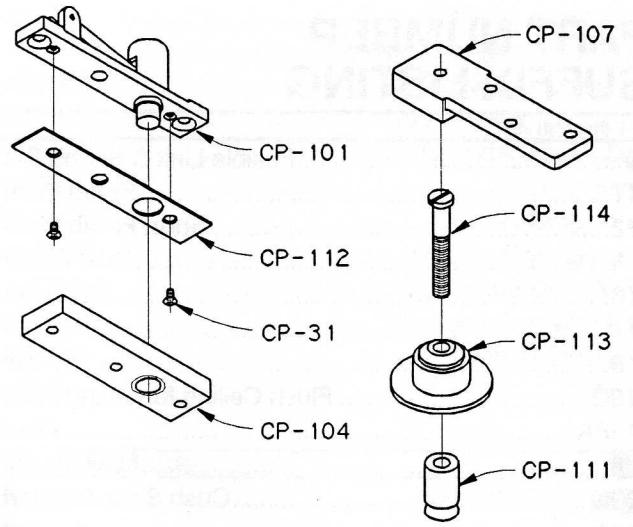

IP170

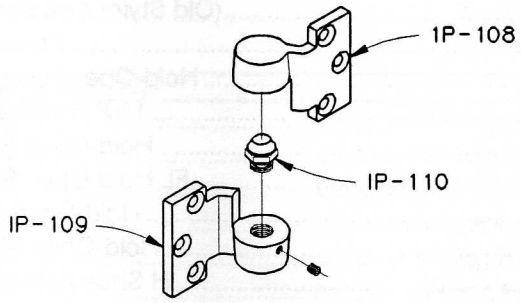

OP(J)160 SET

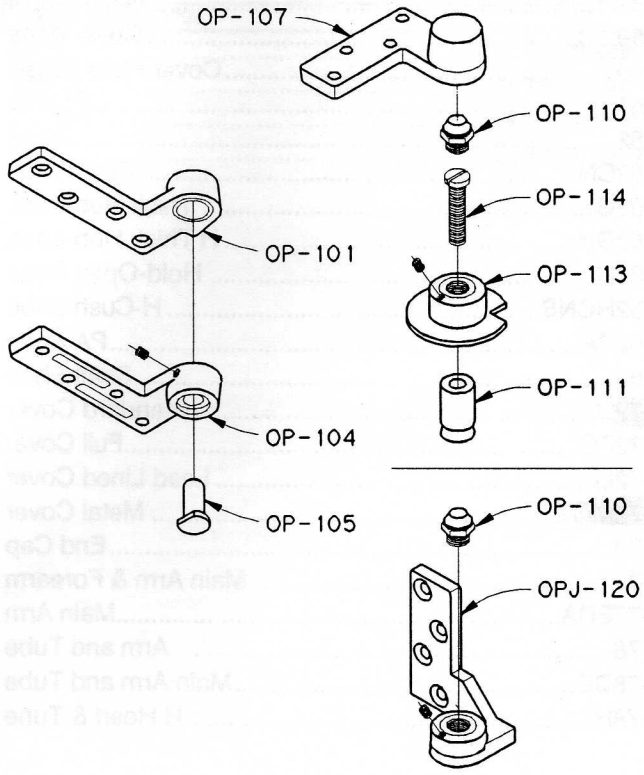

© 1992 Schlage Lock Co.
LCN CLOSERS, 121 W.Railroad Ave.,Princeton, IL 61356
Phone (815) 875-3311 Fax (815) 875-3222

PART NUMBER SUFFIX LISTING

-1 through -99

-9 ..... Fusible Link & Spring Set
-11 ..... Finish Plate
-12 ..... Short Finish Plate
-13 ..... Dust Cover
-16 ..... Bracket
-17 ..... Bracket
-18 ..... Plate
-18G ..... Flush Ceiling Mounting plate
-18PA ..... Plate
-28 ..... Fusible Link
-30 ..... Cush Shoe Support
-30A ..... Bracket
-31 ..... Screw
-32 ..... (Old Style) Arm Screw
-35 ..... Forearm
-35H ..... Hold-Open Forearm
-36 ..... 180° H Forearm
-37 ..... Hold-Open Stud
-37FL ..... FL Hold-Open Stud
-41 ..... Hold-Open Nut
-45 ..... Hold-Open Shoe
-45H ..... H Shoe Assembly
-48 ..... Hold-Open Forearm
-49 ..... Hold-Open Main Arm
-49H ..... H Main Arm
-59 ..... Cover Plate
-60 ..... Cover Plate Screw
-61 ..... Spacer
-62 ..... Shoe
-62CNS ..... Cush Shoe
-62G ..... Thick Hub Shoe
-62GH ..... H Thick Hub Shoe
-62H ..... Hold-Open Shoe
-62HCNS ..... H-Cush Shoe
-62PA ..... PA Shoe
-65 ..... Soffit Shoe
-72 ..... Standard Cover
-72FC ..... Full Cover
-72LL ..... Lead Lined Cover
-72MC ..... Metal Cover
-73 ..... End Cap
-77 ..... Main Arm & Forearm
-77EDA ..... Main Arm
-78 ..... Arm and Tube
-78DE ..... Main Arm and Tube
-78H ..... H Head & Tube
-78HL ..... H Head & Long Tube
-79 ..... Rod & Shoe
-79ELR ..... Extra Long Rod & Shoe
-79H ..... H Rod & Shoe
-79LR ..... Long Rod & Shoe
-82 ..... Rod
-83 ..... Arm Set Screw
-83H ..... H Arm Set Screw
-95 ..... Arm Stud
-96 ..... Bushing Assembly
-97 ..... Screw and Washer Set
-97H ..... H Stud and Washer Set

-100 through -199

-101 ..... Pivot Jamb Leaf
-104 ..... Pivot Door Leaf
-105 ..... Bearing Pin Assembly
-112 ..... Pivot Finish Plate
-107 ..... Door Leaf
-108 ..... Door Leaf
-109 ..... Jamb Leaf
-110 ..... Bearing Pin
-111 ..... Expansion Anchor
-113 ..... Bearing Cone Assembly
-114 ..... Cone Screw
-120 ..... Jamb Leaf
-124 ..... Plug
-136 ..... FL Forearm
-141 ..... Plug
-141-1 ..... Plug
-141-2 ..... Plug
-145 ..... Flush Transom Shoe
-145H ..... H Flush Transom Shoe
-146 ..... Shaft Cover
-159 ..... Arm Screw
-163 ..... Arm Insert
-164 ..... Screw Insert
-168 ..... Yoke
-169 ..... Track Bumper Assembly
-172 ..... Wiring Cover
-182 ..... Stand Off
-186 ..... Nut

-200 through -299

-201 ..... 5th Screw Spacer
-206 ..... Conduit Housing
-210 ..... Transformer
293 ..... Muffler

LCN CLOSERS, 121 W.Railroad Ave.,Princeton, IL 61356
Phone (815) 875-3311 Fax (815) 875-3222
Form #716-0292-10M
© 1992 Schlage Lock Co.

PART NUMBER SUFFIX LISTING

Continued from page #77

-300 through -399

329 ..... Air Filter Assembly
-384 ..... Stop
390 ..... Relay

-400 through -499

-416 ..... Wood Mounting Clip Set
-417 ..... Wood Mounting Clip Set
-418 ..... PA Shoe Adapter
-419 ..... Flush Panel Adapter
-421 ..... Arm Stud
-425 ..... Roller Locking Screw

-900 through -999

900 ..... Power Supply Board
903 ..... Timer Module
903-1 ..... One Shot Timer Module
929 ..... Filter and Seal for 329
941 ..... 901 Regulator & Valve Assembly
941ES ..... ES901 Regulator & Valve Assembly
942 ..... Regulator & Valve Assembly
942ES ..... Regulator & Valve Assembly

-1200 through -1299

-1247 ..... Latch Stile Clip
-1248 ..... Hinge Stile Clip
-1249 ..... Cover
-1250 ..... Cover
-1251 ..... Cover

-3000 through -3099

-3034 ..... Track Roller
-3038 ..... Regular Track
-3038B ..... Regular Track with bumper
-3038H ..... Hold-Open Track
-3038HB ..... H Track with bumper
-3045 ..... Hold-Open Shoe
-3048 ..... H-Cush Forearm
-3049 ..... Hold-Open Arm
-3049CNS ..... H Cush-N-Stop Arm
-3049EDA ..... H Extra Duty Arm
-3049FL ..... Fusible Link Arm
-3049FLPA ..... Fusible Link Arm with PA
-3049H180 ..... 180° Hold-Open Arm
-3049PA ..... Hold-Open Arm with PA
-3054 ..... Hold-Open Spring Clip
-3071 ..... Cylinder Assembly
-3071AVB ..... AVB Cylinder Assembly
-3071B80 ..... 80° Bypass Cylinder
-3071B140 ..... 140° Bypass Cylinder
-3071DA ..... Delay Cylinder Assembly
-3077 ..... Regular Arm
-3077CNS ..... Cush-N-Stop Arm
-3077DE ..... Double Egress Arm
-3077EDA ..... Extra Duty Arm
-3077PA ..... Regular Arm with PA
-3077SF ..... Swing-Free Arm
-3077T ..... Arm

-3100 through -3199

-3166 ..... Solenoid Assembly

-3200 through -3299

-3210 ..... Transformer

-3300 through -3399

-3322 ..... Wiring Harness
-3340 ..... Wiring Harness
-3351 ..... On/Off Switch Assembly
-3352 ..... Detector Module
-3354 ..... Wiring Harness
-3360 ..... Wiring Harness
-3362 ..... Input Jumper

-3900 through -3999

-3938 ..... Track only
-3938B ..... B Track only
-3938H ..... H Track only
-3971 ..... Cylinder only

© 1992 Schlage Lock Co.
LCN CLOSERS, 121 W.Railroad Ave.,Princeton, IL 61356
Phone (815) 875-3311 Fax (815) 875-3222

HOW TO USE THE LCN PARTS LIST

The PARTS LIST is designed to help technical service personnel correctly identify parts that may be required to return an LCN closer to service.

PARTS LIST ORGANIZATION

The PARTS LIST illustrates all replacement parts available through LCN distributors. The information has been organized by the type of closer. The sections in order are; Surface Mounted, Concealed, Life-Safety, Security, Special Closers for Accessibility, and Miscellaneous Products. Closers are listed in numerical order within each section.

Major components such as complete cylinder, cover, arm, and track assemblies are listed for each series. Individual parts of these components are also listed. Major components and principal service parts are shown in *ITALICS*. All other service parts are listed in **BOLD** print with an asterisk " * " preceding the part number.

CASTING AND/OR FORGING NUMBERS

These commonly appear on LCN parts, particularly cylinders and arms. These numbers are NOT the numbers needed to order replacement parts. You must follow the steps outlined under HOW TO ORDER to obtain the correct replacement part.

WHAT IF YOU CAN'T IDENTIFY THE PART?

The part you want may not be listed and could be obsolete. Contact your distributor, local representative, or LCN Customer Service for assistance. They will assist you in determining if a part is available to solve the problem.

In some cases, small parts and some electrical components are only be available as part of an assembly. Generally parts for closers less than 10 years old are available. Internal parts for cylinders are not available.

INFORMATION YOU MUST PROVIDE

In addition to the closer series, suffix number, and description, provide the additional information requested to the right of the parts' description.

F = FINISH. Indicate the desired painted or plated finish for the part. Not all parts are available with plated finishes. Refer to the LCN finish chart.

H = HAND of closer or part. Indicate right hand (RH) or left hand (LH) swing of the door.

S = SIZE. Refers to the spring size inside the cylinder assembly. This is based on the width of the door with size six (6) the strongest spring size.

C = CYLINDER FUNCTION. Selected closers offer special cylinder functions such as delayed action or hold-open bypass.

M = MOUNTING. Selected closers require specialized mounting options.

V = VOLTAGE. Some parts require specific input voltage information. In the case of SED -3038 or -3938 tracks and MED -3071 cylinder assemblies two input voltages are required.

- ☐ Where options other than FINISH and HAND are required, the available choices are listed like this.
- • Explanatory or limiting statements are listed immediately below the part number or option listing like this.

Footnotes present information on specific closers and parts.

Standard notes provide prompts and information for the entire PARTS LIST.

HOW TO ORDER

- ☐ 1. Identify the closer series; 4010, 1460, 2030, etc.
  - • Closer series, spring size, and any special cylinder function, are stamped either on the cylinder packing nut or the cylinder casting near the pinion (arm shaft).
- ☐ 2. Refer to the page(s) illustrating the service parts available for that closer and select the part required by closer series and suffix.
- ☐ 3. Determine if any additional information is required for each part, such as HAND, VOLTAGE, etc.
- ☐ 4. Order the parts using the closer series, suffix number, description, and additional information required.

For example:

4010-159, arm screw, aluminum finish

4920-37, hold-open stud, LH, dark bronze finish

PRICING

Prices for part numbers shown in *ITALICS* may be found in the LCN PRICE LIST.

Prices for part numbers listed in **BOLD**, with a " * " may be found in the **LCN PARTS PRICE LIST**.

ERRORS AND OMISSIONS

The information in the PARTS LIST is subject to change without notice and does not represent a commitment on the part of LCN. The illustrations show the general size and shape of a part and its relationship to other closer parts. Actual parts may vary from the illustrations, depending on the closer series.

Every effort has been made to insure the accuracy and completeness of the LCN PARTS LIST. Please contact the LCN Customer Service Department if you identify an error or an omission. We will incorporate all corrections and changes at the next printing.

LCN CLOSERS, 121 W.Railroad Ave.,Princeton, IL 61356
Phone (815) 875-3311 Fax (815) 875-3222
Form #716-0292-10M
© 1992 Schlage Lock Co.